with Hung Front Plate

Jøtul GF 305 DV IPI

Direct Vent Gas Stove

Installation and Operation Instructions

WARNING: If the information in these instructions is not followed exactly, a fire or explosion may result causing property damage, personal injury or loss of life.

- **Do not store or use gasoline or other flammable vapors and liquids in the vicinity of this or any other appliance.**
- **WHAT TO DO IF YOU SMELL GAS**
  - **Do not try to light any appliance.**
  - **Do not touch any electrical switch; do not use any phone in your building.**
  - **Leave the building immediately.**
  - **Immediately call your gas supplier from a neighbor's phone. Follow the gas supplier's instructions.**
  - **If you cannot reach your gas supplier, call the fire department.**
- **Installation and service must be performed by a qualified installer, service agency or the gas supplier.**
- **In the Commonwealth of Massachusetts, a carbon monoxide (CO) detector shall be installed in the same room as the appliance.**

This appliance may be installed in an aftermarket, permanently located, manufactured home or mobile home, where not prohibited by local codes.

This appliance is only for use with the types of gas indicated on the rating plate. A conversion kit is supplied with the appliance.

NOTE: This model front door panel is hung on the firebox - not hinged. See removal instructions on page 5.

INSTALLER: Leave this manual with the appliance.

OWNER: Keep this manual for future reference.

⚠ DANGER

HOT GLASS WILL CAUSE BURNS.

DO NOT TOUCH GLASS UNTIL COOLED.

NEVER ALLOW CHILDREN TO TOUCH GLASS.

A barrier designed to reduce the burn hazard from the glass viewing area is provided with this appliance and shall be installed for the protection of children and other at-risk individuals.

Canada

ENERGUIDE

Gas Fireplace Energy Efficiency Rating

Natural Gas / 67.98%
Propane / 68.14%

Based on CSA P.4.1-15

Model No. Jøtul GF 305 DV IPI

ENER CHOICE
ENERCHOICE.ORG

THIS OWNER'S MANUAL PROVIDES INFORMATION TO ENSURE SAFE INSTALLATION AND EFFICIENT, DEPENDABLE OPERATION. PLEASE READ THESE INSTRUCTIONS IN THEIR ENTIRETY AND MAKE THEM AVAILABLE TO ANYONE USING OR SERVICING THE APPLIANCE.

DO NOT ATTEMPT TO ALTER OR MODIFY THE CONSTRUCTION OF THIS APPLIANCE OR ITS COMPONENTS. ANY MODIFICATION OR ALTERATION WILL VOID THE WARRANTY, CERTIFICATION AND LISTING OF THIS APPLIANCE.

THIS APPLIANCE MUST BE INSTALLED AND MAINTAINED BY A QUALIFIED SERVICE TECHNICIAN OR AGENCY.

Suggested Tools for Installation and Service

- External regulator (for Propane only)
- Piping which complies with local code
- Manual shut-off valve - T-Handle required in Massachusetts
- Sediment trap - if required by code
- Tee joint
- Pipe wrench
- Pipe sealant
- 10 mm open end wrench
- 1/2", 7/16" open end wrench
- Phillips head screwdriver
- Flat head screwdriver
- 1/4" nut driver
- Gloves
- Safety glasses
- Torx T-20 screwdriver for Fuel Conversion

PLEASE NOTE:

Initial Break-in

It is normal for smoke and odor to occur during the initial stages of operation, depending upon temperatures generated over time. This "curing" condition can be alleviated by promoting fresh air circulation within the immediate vicinity of the appliance. See page 28 for further information.

Operation Sound

Please be aware that cast iron and steel components expand and contract with temperature fluctuations that are often accompanied by "creaking" or "pinging" sounds. This is the result of natural thermal activity.

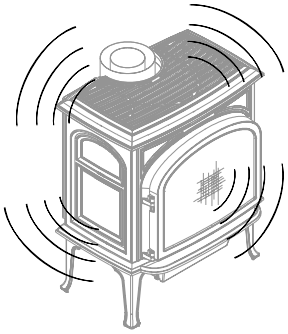

The optional blower fan will also generate a slight hum at the low setting and progressively increase with the velocity of forced air.

Installation Requirements for the Commonwealth of Massachusetts

THIS PRODUCT MUST BE INSTALLED BY A LICENSED MASTER OR JOURNEYMAN PLUMBER OR GAS-FITTER WHEN INSTALLED IN THE COMMONWEALTH OF MASSACHUSETTS.

1. If there is not one already present, on each floor level where there are bedroom(s), a carbon monoxide detector and alarm shall be placed in the living area outside the bedroom(s). The carbon monoxide detector shall comply with NFPA 720 (2005 Edition).
2. A carbon monoxide detector shall:
   a) Be located in the room that houses the appliance or equipment;
   b) Be either hard-wired or battery powered or both; and
   c) Shall comply with NFPA 720 (2005 Edition).
3. A Product-approved vent terminal must be used, and if applicable, a Product-approved air intake must be used. Installation shall be in strict compliance with the manufacturer's instructions. A copy of the installation instructions must remain with the appliance or equipment at the completion of the installation.
4. Manual gas supply line shut-off valve

NATIONAL FIREPLACE INSTITUTE
NFI
CERTIFIED
www.nficertified.org

We recommend that our gas products be installed and serviced by professionals who are certified in the U.S. by the National Fireplace Institute® (NFI) as NFI Gas Specialists.

Table of Contents

1. Specifications 4
2. Initial Assembly 5
3. General Information 6
4. Safety Information 6
5. Installation Requirements.....7
   - Floor Protection 7
   - Clearances.....7-8
6, Vent Requirements 9
   - Vertical Termination.....11
   - Horizontal Termination 13
7. Fuel Conversion.....15-17
8. Gas Connection.....17
9. Gas Pressure 18
10. High Altitude Adjustment 18
11. Optional Equipment 19
   - Wall Thermostat 19
   - Firebox Panel Kits 19
   - Premium Upgrade Kits 20
   - Flame Control..... 21
   - Accent Lamp 21
   - Blower 22
12. Log Set Installation 23-27
13. System Check 28
14. Flame Picture Adjustment 29
15. Operation Guidelines 30
   - Manual Operation 31
   - Remote Control 32-35
16. Maintenance 36
   - Glass Replacement 36
   - Battery Replacement - Transmitter 37
   - Battery Replacement - IFC 37
17. Appendix 38
   - Wiring Diagram 38
   - Illustrated Parts Lists..... 39-42
   - Utility Cover Plates 43
   - Mobile Home Requirements 44
   - Safety Screen Replacement 45
18. Warranty Statement..... 46
19 Lighting Instructions 47

Jøtul GF 305 DV IPI

Direct Vent Gas Heater

Manufactured and Distributed by:
Jøtul North America
55 Hutcherson Dr.
Gorham, Maine 04038

Certified Test Standards

This appliance complies with National Safety standards and is tested and listed by Intertek Testing Services of Middleton, Wisconsin to ANSI Z21.88-2016 • CSA 2.33-2016, *Vented Gas Fireplace Heater* and CAN/CGA 2.17-M17, *Standard for Gas Appliances for Use at High Altitudes.*

C US

Intertek

⚠ WARNING:

READ AND UNDERSTAND ALL OPERATING INSTRUCTIONS BEFORE ATTEMPTING TO OPERATE THIS APPLIANCE. DO NOT ALLOW ANYONE TO OPERATE THIS APPLIANCE WHO HAS NOT READ AND UNDERSTOOD THESE INSTRUCTIONS.

KEEP THE REMOTE CONTROL TRANSMITTER WHERE CHILDREN CANNOT REACH IT.

⚠ WARNING:

SEVERE INJURY. THIS APPLIANCE CAN BE SET TO OPERATE THERMOSTATICALLY. BE AWARE THAT THE STOVE MAY BE VERY HOT EVEN WHEN THE BURNER IS NOT APPARENTLY OPERATING.
KEEP CHILDREN AWAY FROM THE APPLIANCE.

⚠ WARNING:

FIRE HAZARD. CAN CAUSE SEVERE INJURY OR DEATH. THE APPLIANCE CAN TURN ON SUDDENLY. KEEP AWAY FROM THE APPLIANCE BURNER WHEN OPERATING THE REMOTE SYSTEM.

1. Specifications

Input Rates

Natural Gas

18,707 BTU/hr. minimum input
28,000 BTU/hr. maximum input

Propane

22,370 BTU/hr. minimum input
28,000 BTU/hr. maximum input

Inlet Pressure:	MIN	MAX
Natural Gas:	5.0 WC (1.25 kPa)	7.0 WC (1.74 kPa)
Propane:	12.0 WC (3.0 kPa)	14.0 WC (3.48 kPa)

Manifold Pressure:	MIN	MAX
Natural Gas:	1.6 WC (.40 kPa)	3.50 WC (.87 kPa)
Propane:	6.4 WC (1.59 kPa)	10.0 WC (2.49 kPa)

- SIT Proflame 2 Intermitent Pilot Ignition - 120V / 60 Hz
- Steady State Efficiency: 70.49% NG / 71.57% LP
- AFUE Efficiency: 67.2% NG / 67.1 % LP
- CSA P.4.1-15 Fireplace Efficiency:
  NG - 67.98% LP - 68.14%
- Factory Air Shutter Settings: NG - 1/16" LP - 1/8"
- Continuous Pilot Ignition Mode (CPI) is available
- Power Requirement: 120 VAC
  Back-up Battery Pack: 4, AA - 1.5V
- Ambient Temperature Range: 32 -122°F (0 - 50°C)

Miscellaneous Hardware Bag Contents

- Fuel Conversion Kit , LP - Manual Valve 158024
- Rock Wool Embers, 1 oz. 157259
- Leg Leveler Bolts, 2 - M8 x 40 mm 118047
- 1.5v AA Alkaline Batteries, 4 224109

Accessories

- Beach Fire Log Set 158020
- Traditional Log Set 158021
- Accent Lamp Kit * 157469
- Blower Kit w/ Remote Transmitter 158023
- Fuel Conversion Kit, LP - Manual Valve 158024
- Fuel Conversion Kit, NG - Manual Valve 158025
- High Altitude Adjustment Kit, LP 158026
- High Altitude Adjustment Kit, NG 158027
- Fuel Conv. Kit, LP - Motorized Valve 158028
- Fuel Conv. Kit, NG - Motorized Valve 158029
- Premium Upgrade Kit, NG 158030
- Premium Upgrade Kit, LP 158031
- Flame Control Kit, NG * 158032
- Flame Control Kit, LP * 158033
- Fluted Liner Kit 158034
- Black Reflective Panel Kit 158035
- Mobile Home Bracket Kit 158038
- *Remote Control Transmitter 157495
  required for Accent Lamp and Flame Control

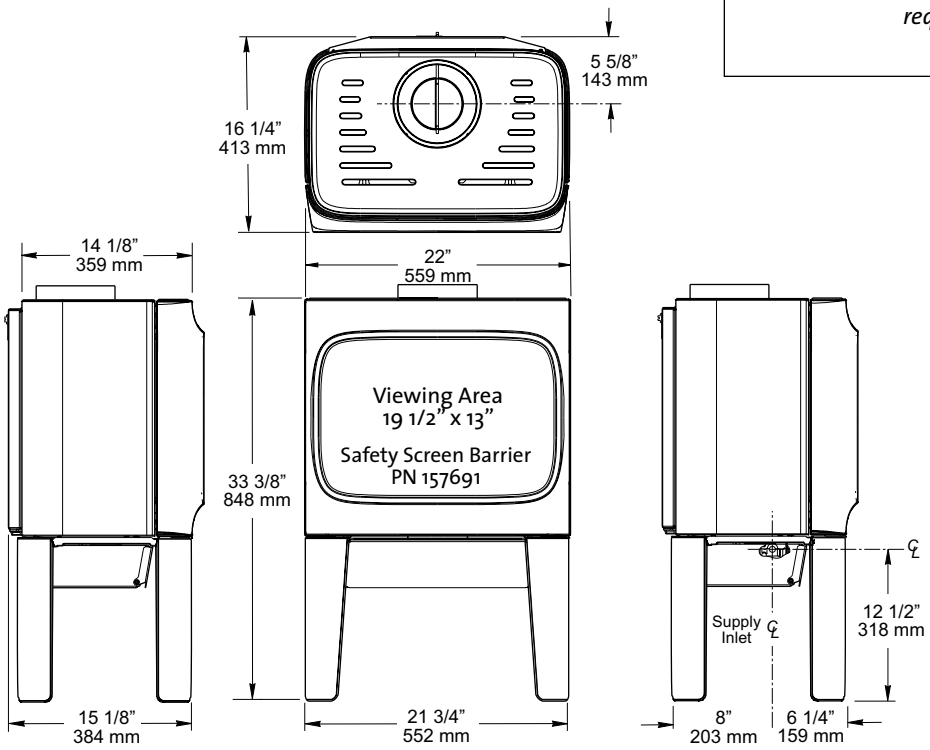

Figure 1.1 Dimensioned views, GF 305 DV IPI

SAFETY BARRIER SCREEN
The front door of this appliance is equipped with an integral, Certified Safety Barrier Screen that must remain installed at all times. Should it become damaged, contact your authorized Jøtul dealer for replacement.

2. Initial Assembly

STOP! FOR EASIEST ACCESS, INSTALL ACCESSORIES, (Premium Kit, Accent Lamp, Flame Control, and/or Blower), BEFORE REMOVING THE STOVE FROM THE PALLET. SEE PAGE 20 for details.

THE ACCENT LAMP MUST BE INSTALLED BEFORE CONNECTING THE STOVE TO VENTING.

CAUTION: Enamelled parts may be damaged if handled without care.
The stove is heavy.
Have assistance available to move it into position.
Place removed parts on a blanket, towel, or other protective material.

Unpacking the Stove

EXCEPT AS NOTED, ALL INSTRUCTIONS ARE ORIENTED FACING THE FRONT OF THE STOVE.

1. **Remove the steel Latch Tool from the pallet.**
2. **OPEN THE FIREBOX / Before Vent Connection**
   - Lift the Top Plate off the stove and set out of the way.
   - Grasp the Front Plate at the center, top and bottom, to lift it up and forward to disengage it from the support brackets at each side. See fig. 2.1.
   - Engage the Latch Tool with the holes in the sprung glass frame latches, located on top of the firebox. See fig. 2.2. Pull the latch hooks out to disengage them from the glass frame.
   - Tilt the glass frame forward, then up and out of the stove.
3. **Remove the shipping strap** and packing material from the burner using a 1/4" nut driver.
4. **Backup Batteries:** The battery box is located in the stove controls compartment, behind the burner switch plate. See Fig. 15.1, page 31.
   - Disengage the box from the hook & loop base.
   - Press and slide the cover panel to open and orient the batteries as diagrammed in the box.

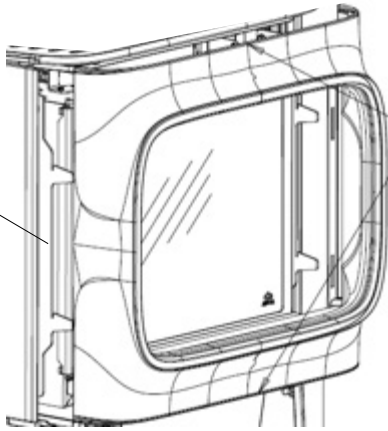

Figure 2.1. Lift Front Plate to disengage from side brackets.

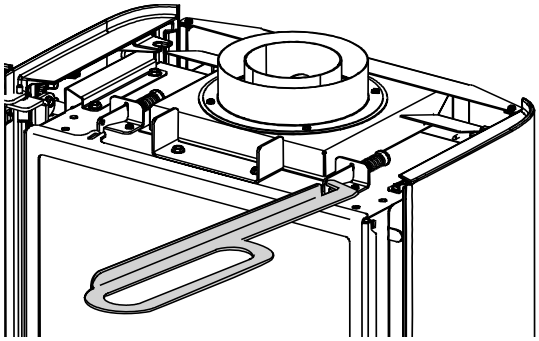

Figure 2.2. Use Latch Tool to disengage glass frame.

OPEN THE FIREBOX - With Vent Connected

Use this method when the completed vent connection prevents complete removal of the top plate.

- To lift the Top Plate, insert the Latch Tool through a forward grill opening and twist it 90° to engage the **Support Tab** under the grate bar. Raise the plate, resting the end of the tool on the firebox to support the plate in a raised position. See fig. 2.3.
- Grasp the Front Plate at the center top and bottom and lift it straight up and out to disengage it from the stove side brackets. You can then set the top plate back down and use the Latch tool to disengage the Glass Frame as show in fig. 2.2.

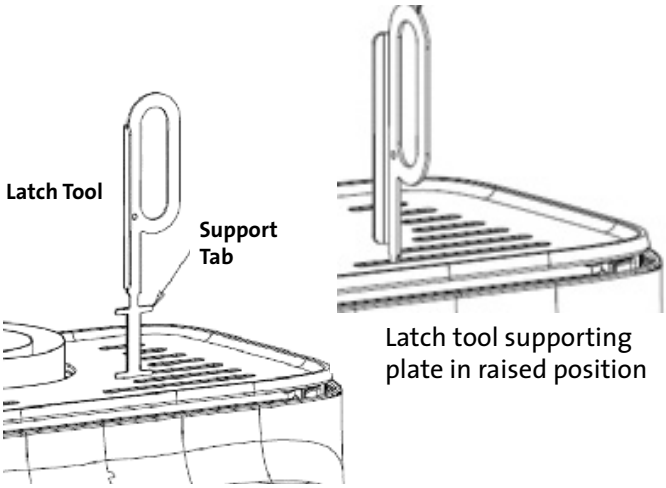

Figure 2.3. Using Latch Tool to raise and support Top Plate.

3. General Information

- **THIS HEATER MUST BE INSTALLED AND MAINTAINED BY A QUALIFIED SERVICE AGENCY.**
- The installation and repair of this appliance must be done by a qualified service person. Failure to properly install and maintain this heater could result in an unsafe or hazardous installation, which may result in a fire, explosion, property damage, personal injury or loss of life.
- This appliance should be inspected before use and at least annually. More frequent cleaning may be required due to excessive lint from carpeting, bedding material, etc. It is imperative that control compartments, burners, and circulating air passageways of the appliance be kept clean. See Maintenance, page 36, for details.
- **THIS APPLIANCE MUST NOT BE CONNECTED TO A CHIMNEY OR FLUE SERVING ANY OTHER APPLIANCE.**
- The installation must conform to local codes. Your local Jøtul dealer can assist you in determining what is required in your area for a safe and legal installation. Some areas require a permit to install a gas burning appliance. Always consult your local building inspector, or authority having jurisdiction, to determine what regulations apply in your area.
- **CODE COMPLIANCE :** Your local officials have final authority in determining if a proposed installation is acceptable. Any requirement that is requested by the local authority having jurisdiction, that is not specifically addressed in this manual, defaults to local code. In the absence of local codes, the installation requirements must comply with the current edition of National codes. In the U.S., these requirements are established in the National Fuel Code, ANSI Z223.1.(NFPA 54) current edition. In Canada, the codes have been established in CAN/CGA B149 Fuel Installation Code, current edition..
- **DO NOT OPERATE THIS STOVE IF ANY PART HAS BEEN UNDER WATER**. Call a qualified service technician to inspect the heater and to replace any part of the control system and any gas control which may have been under water.

4. Safety Information

- **Due to the high operating temperatures this appliance should be located out of traffic and away from furniture and draperies. Maintain proper clearance to combustible mantels and fireplace trim.**
- **Children and adults should be alerted to the hazards of high surface temperatures and should stay away to avoid burns or clothing ignition.**
- **Young children should be supervised while they are in the same room as the appliance. Toddlers, young children and others may be susceptible to accidental contact burns. A physical barrier, such as a child guard, is recommended to be used if there are at-risk individuals in the house. To restrict access to a fireplace or stove, install an adjustable safety gate to keep toddlers, young children and other at-risk individuals out of the room and away from hot surfaces.**
- **A safety barrier designed to reduce the risk of burns from the hot viewing glass is provided with this appliance and shall remain installed for the protection of children and other at-risk individuals.**
- **If the barrier becomes damaged, the screen barrier must be replaced with Jøtul GF 305 Replacement Screen 157992, available from any Jøtul Authorized Dealer.**
- **Any safety screen, guard, or barrier removed for servicing an appliance must be replaced prior to operating the appliance.**
- **Clothing or other flammable materials should not be placed on or near the fireplace.**
- **Never allow anyone to use the fireplace if they are unfamiliar with its operation.**
- **NEVER store or use gasoline or any other flammable vapors or liquids in the vicinity of this appliance.**
- **Never burn any solid materials (wood, cardboard, paper, coal, etc.) in this appliance. Use with natural gas or propane fuel ONLY.**
- **Do not slam or strike the glass panel.**
- **This appliance is NOT for use with aftermarket glass doors.**
- **Wear gloves and safety glasses while installing or performing maintenance procedures on this appliance.**

5. Installation Requirements

Location

In selecting a location for the stove, consider the following points:
1) Heat distribution
2) Vent termination requirements
3) Gas supply line routing
4) Traffic areas, furniture, draperies, etc.

The stove may be located on or near conventional construction materials, however, proper clearance to combustibles must be maintained in order to provide adequate air circulation around the appliance. Also, it is important to provide adequate access around the stove for servicing and operation.

The clearance and hearth specifications listed in this manual are the minimum requirements for combustible material. A combustible material is anything that can burn (i.e. sheet rock, wall paper, wood, fabrics etc.). These surfaces are not limited to those that are visible and also include materials that may be located behind non-combustibles.

If you are not sure of the combustible nature of a material, consult your local fire officials. Remember, "Fire Resistant" materials are considered combustible: they are difficult to ignite, but will burn. Also, "fire-rated" sheet rock is considered combustible.

Floor Protection

This appliance CANNOT be installed directly on carpeting, vinyl, linoleum or wood laminate flooring, such as Pergo.

If this appliance will be installed on any combustible material OTHER THAN WOOD, a floor pad must be installed that is either metal, wood, ceramic tile, stone, or a listed hearth pad. This floor protection must extend the full width and depth of the appliance. It is not necessary to remove carpeting, vinyl or linoleum from underneath the floor protection. See fig. 5.1.

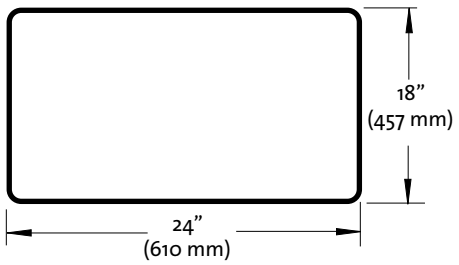

Figure 5.1. Minimum combustible floor protection.

Stove and Vent Clearance Requirements

Minimum Clearances from the Stove to Combustibles:

See figs. 5.2-4.

		Measured from:
Rear:	2" (51 mm)	Rear Shroud
Ceiling:	24 1/2" (622 mm)	Top Plate
Corner:	3" (76 mm)	Side Plate
Right Side:	2" (51 mm)	Side Plate
Left Side:	6" (152 mm)	Side Plate

- ***provides clearance necessary to fully open the front door***

Minimum Clearances between Vent Pipe and Combustible Materials:

Horizontal Run:	
Off the top of the pipe	2" (51 mm)
Off the sides and bottom	1" (25 mm)
Vertical Run:	
All sides	1" (25 mm)

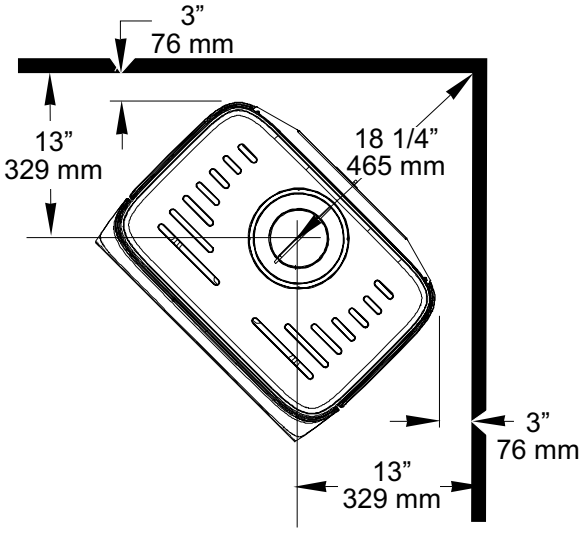

Figure 5.2. Corner clearances.

Alcove Installation

Maximum Alcove Depth: 24" (607 mm)

Minimum Alcove Width:* 30" (826 mm)

Minimum Alcove Ceiling Height from floor: 57 7/8" (1470 mm)

* Width based on 6" left side clearance necessary to door to swing fully open for maintenance purposes.

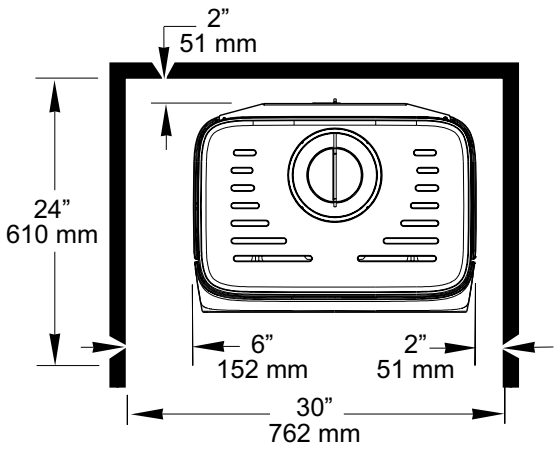

Figure 5.3
Alcove Clearances.

Clearance to Combustible Materials Above Stove

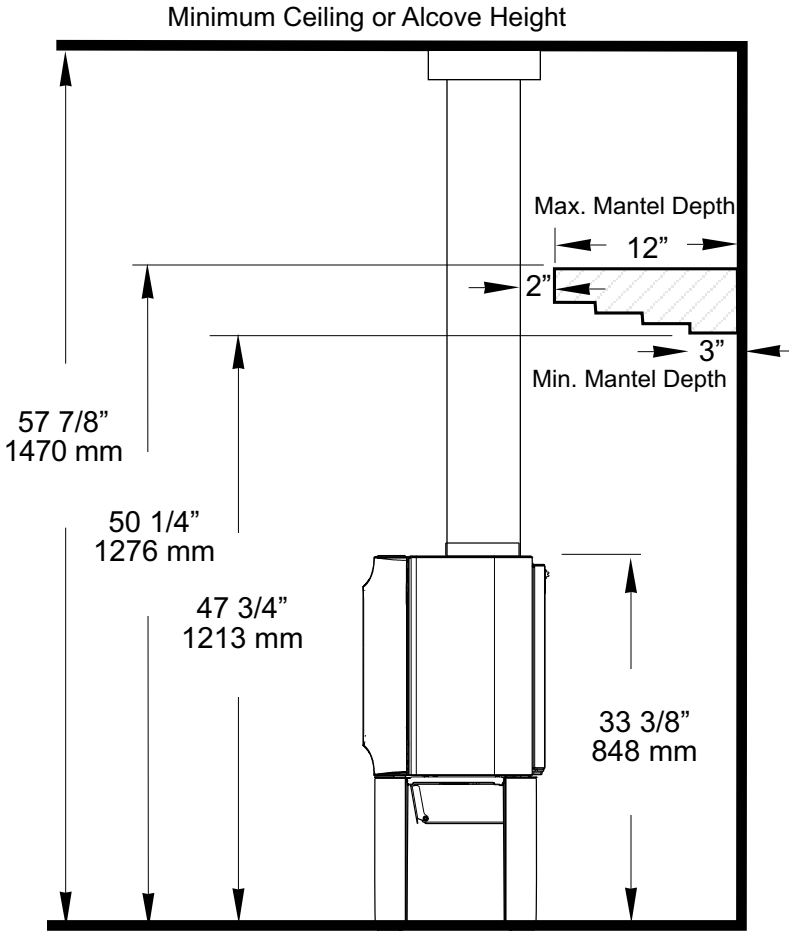

Figure5.4. Mantel Clearances from stove and venting.

6. Venting Requirements

The Jøtul GF 305 DV IPI gas stove may be installed with a vertical or horizontal termination and must conform to the configuration requirements described below.

This appliance is approved for use with vent systems from the following manufacturers:

- **M&G DuraVent DirectVent Pro and GS Series**
- **American Metal Products (Amerivent)**
- **Security Chimneys International, Ltd. (Secure Vent)**
- **Selkirk Metalbestos (Direct Temp)**
- **Metal-Fab, Inc. (Sure-Seal Direct Vent)**
- **Industrial Chimney Corp. (ExcelDirect)**
- **Bernard Dalsin Mfg. (Pro Form)**
- **Olympia Chimney Supply, Inc. (Ventis Direct Vent)**

Use parts of one manufacturer only - DO NOT MIX VENT COMPONENTS FROM DIFFERENT MANUFACTURERS IN THE SAME SYSTEM.

Installation of any components not manufactured or approved by Jøtul or failure to meet all clearance requirements will void all warranties and could result in property damage, bodily injury, or serious fire.

The approved vent configurations described in this manual are derived from extensive testing under controlled laboratory conditions. Gas appliance performance can be negatively affected by variables present in the installation environment, i.e: atmospheric pressure, strong prevailing winds, adjacent structures and trees, snow accumulation, etc. These conditions should be taken into consideration by the installer and stove owner when planning the vent system design.

IMPORTANT

- JOINT SEALING REQUIREMENT: APPLY A 1/8" BEAD OF HIGH-TEMPERATURE SEALANT OR MIL-PAC® TO THE MALE SECTION OF THE INNER VENT PIPE. THE CEMENT SHOULD FORM A SEAL BETWEEN THE INNER AND OUTER PIPES.
- NEVER MODIFY ANY VENTING COMPONENT, OR USE ANY DAMAGED VENTING PRODUCT.
- THE GAS APPLIANCE AND VENT SYSTEM MUST BE VENTED DIRECTLY TO THE OUTSIDE OF THE BUILDING AND NEVER ATTACHED TO A CHIMNEY SERVING A SOLID FUEL OR GAS BURNING APPLIANCE. EACH DIRECT VENT GAS APPLIANCE MUST HAVE ITS OWN SEPARATE VENT SYSTEM. COMMON VENT SYSTEMS ARE PROHIBITED.
- IF VENTING SYSTEM IS DISASSEMBLED FOR ANY REASON, REINSTALL PER THE INSTRUCTIONS PROVIDED FOR THE INITIAL INSTALLATION.

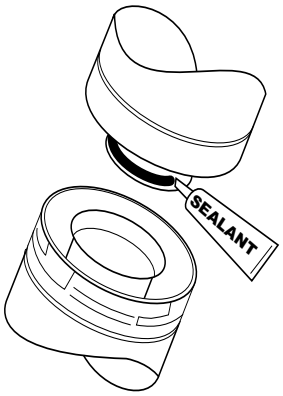

Figure 6.1.
DO NOT USE SILICONE SEALANT.

RE-INSTALL THE TOP PLATE BEFORE CONNECTING VENT TO THE STOVE.

Vent Restriction

The GF 305 DV IPI is equipped with an Exhaust Restrictor Plate which enables regulation of the exhaust gas flow. The plate prevents overly-strong draft that can cause poor combustion and weak flame picture. **Follow the guidelines below and on the following pages to determine the correct restrictor plate setting for your particular installation.**

Exhaust Restrictor

The Exhaust Restrictor plate is located within the firebox exhaust outlet. It is adjusted by rotating the dial on the back of the stove within a range beginning at the factory-set, fully open position (no restriction) to a fully restricted position. See Fig. 6.2. The Minus (-) and Plus (+) signs on the dial relate to degrees of restriction, from zero to approximately 70%. The three, lettered positions correlate to the termination zones (A,B,C) diagramed in figure 6.3. Use the diagram to determine the degree of restriction and shutter setting that correlates to your vent configuration.

Adjusting Exhaust Restrictor Plate:

1. Use a 1/4" nut driver to loosen the lock nut and pivot the dial to the position appropriate to your termination zone. See figs. 6.2-3.
2. Tighten the lock nut after adjustment.

Approved Horizontal and Vertical Vent Terminations

- NOTE: Long vertical vent runs (over 12 ft.) in uninsulated air space may require the stove be operated in CPI mode for best performance.
- ALL VENTING MUST TERMINATE (END) WITHIN ONE OF THE DESIGNATED AREAS.
- SET STOVE EXHAUST RESTRICTOR TO THE POSITION THAT CORRESPONDS TO THE VENT TERMINATION AREA IN THE MATRIX. When termination is exactly on a division line, use the less restrictive position. For example, if termination is 10 feet high and offset 7 feet, restriction should be set at Position B.
- Up to two 45° elbows or one additional 90° elbow is permitted in addition to the first elbow, however, a 5 foot reduction in horizontal length must be made for *each* additional elbow whether 45° or 90°.

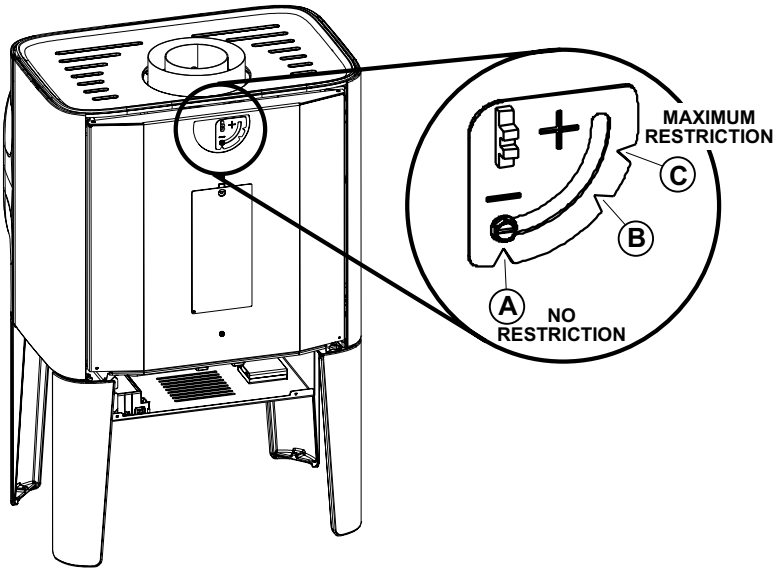

Figure 6.2.
Use 1/4" socket driver to loosen the Exhaust Restrictor dial and adjust it to set the screw at the appropriate notch for your termination zone.

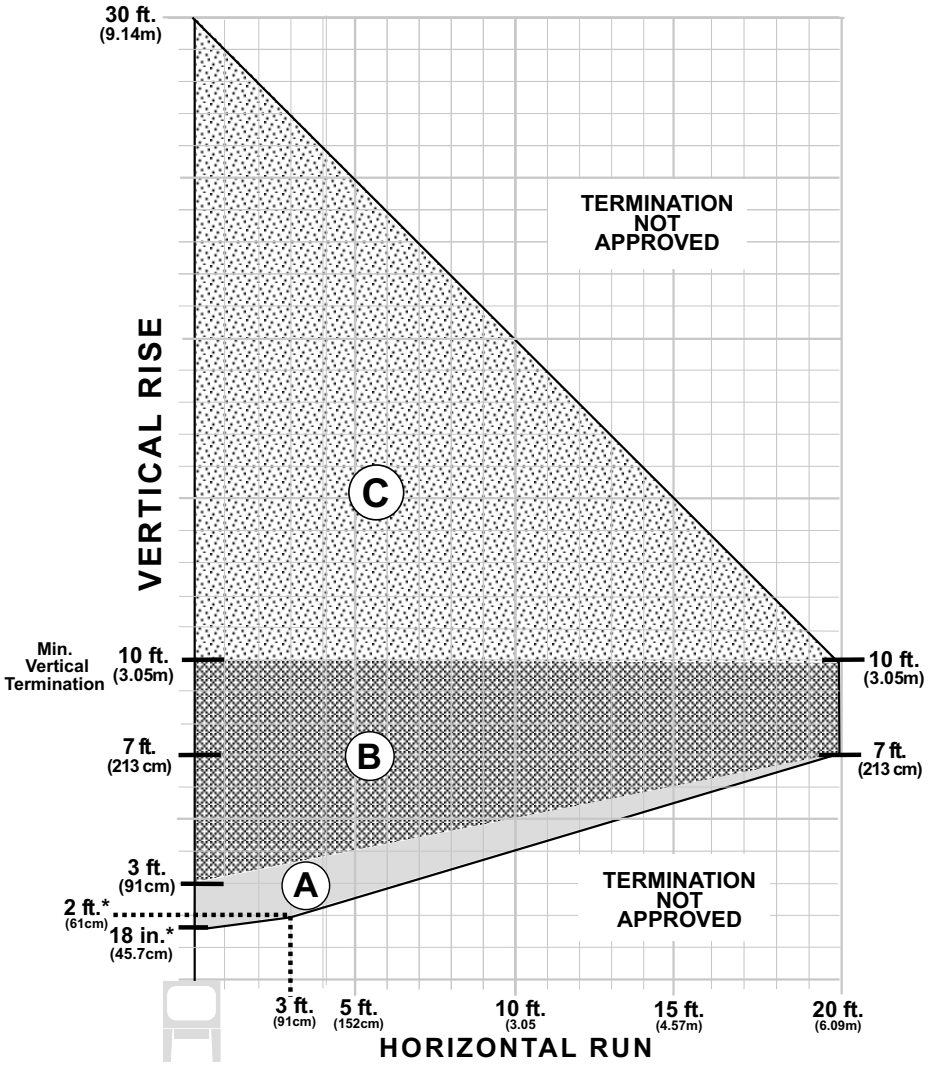

Figure 6.3. Vent Termination Zone Matrix - NG / LP

*** Horizontal Vent Termination**
NG & LP: 18" Min. Vertical x 6" Max. Horizontal

Vertical Vent Termination

This appliance may be vertically vented through a ceiling or to a roof termination using the following guidelines:

- The termination should fall within the shaded areas of the grids depicted in the Vent Matrix, fig. 6.3, page 10.
- **Minimum Vertical Termination is 10 ft.** (3.05m).
- **Total** run, including offsets, must not exceed **30 ft.** (9.14m).
- **Vent Terminus Clearance:** In no case shall any discharge opening on the cap be less than 18 in. (457 mm) horizontally from the roof surface. See fig. 6.4.
- Steep roofs, nearby trees, and predominantly windy conditions can contribute to poor draft and/or promote draft reversal. Increasing the height of the vent may alleviate these conditions.
- Use Wall Straps to support an offset pipe run at intervals of three feet to avoid excessive stress on the offsets.
- A firestop is required at every floor. The floor opening should be framed to 10" X 10" inside dimension.
- Any venting that is exposed in living space above the first floor must be enclosed. Always maintain the required 1" clearance from all sides of the vertical vent system. Insulation in attic space must be retained by an insulation barrier.

FUNCTIONALITY NOTE:

LONG, VERTICAL VENT CONFIGURATIONS MAY REQUIRE THE APPLIANCE BE OPERATED IN CONTINUOUS PILOT MODE (CPI) TO ASSURE ADEQUATE DRAFT AND PROPER PERFORMANCE.

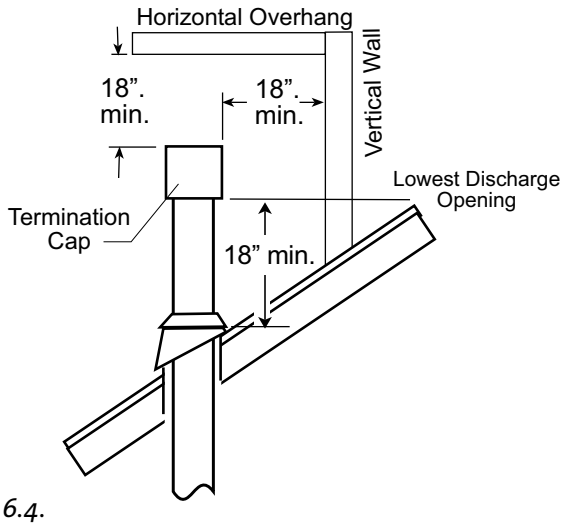

Figure 6.4.
Vertical vent termination height above roof.

RE-INSTALL THE TOP PLATE BEFORE CONNECTING VENT TO THE STOVE.

Horizontal Termination

- Any horizontal termination must fall within the shaded portion of the vent window matrix shown in fig. 6.3.
- Any horizontally terminated vent run must include a minimum vertical rise off the stove. See fig. 6.6.
- **SNORKEL TERMINATION:**

  A 14" (356mm) or 36" (914mm) snorkel termination is approved when installed in conformance with the vent specifications published in this manual. See figs. 6.3 and 6.6.

  The snorkel termination must comply with grade and building clearance requirements per local and national building codes. See fig. 6.7.
- **Horizontal termination requirements:**
  1) Maximum vertical run is 30 ft. (9.144m)
  2) Maximum horizontal run is 20 ft. (3.05 m)
- Up to two 45° elbows or one 90° elbow may be used in addition to the first elbow. **The *horizontal run* must be reduced by 5 feet for *each* additional elbow, whether 45° or 90°.**
- The horizontal termination cap must maintain a 3" clearance to any overhead combustible projections 2 1/2" or less. It must also maintain 12" clearance from projections exceeding 2 1/2". See fig. 6.8.
- **Wall Cut-out Opening:** A minimum 10" X 10" (250 mm x 250 mm) square hole is required for proper pipe clearances through a combustible wall.
- **Horizontal Vent Pipe Clearance to Combustible Material:**

  From Top: 2" (51 mm)
  From Sides: 1" (25 mm)

  DO NOT FILL AIR SPACE WITH ANY TYPE OF INSULATION.
- **Any horizontal run of vent must be level or have a 1/4 in. rise for every foot of run toward the termination cap. VENTING MAY NOT RUN DOWNWARD FROM STOVE TO TERMINATION; A DOWNWARD VENT RUN TRAPS HEAT AND CREATES A FIRE HAZARD.**
- Install a Vinyl Siding Standoff (M&G Dura-Vent #950) between the vent termination and an exterior wall covered by vinyl siding material to prevent potential heat damage to the siding.
- A direct vent terminal may not be recessed into a wall or siding.

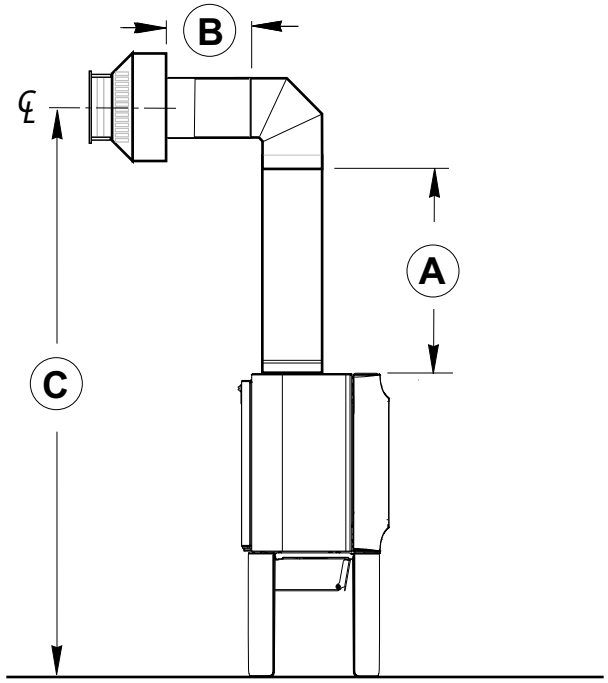

Figure 6.6. Minimum vent required for horizontal termination.

A: Any horizontally terminated vent run must include a minimum vertical rise (A) off the stove of 18 in. (45.7 cm).

**** We strongly suggest a minimum 24 in. (610 cm) vertical rise for any horizontally terminated vent run.***

B: At minimum vertical rise the horizontal run (B) must not exceed 6 in. (15.2 cm).

C: Termination Center Line at 18 in. minimum rise: 61 3/4 in. (156.84 cm)

RE-INSTALL THE TOP PLATE BEFORE CONNECTING VENT TO THE STOVE.

Horizontal Termination Clearance Requirements

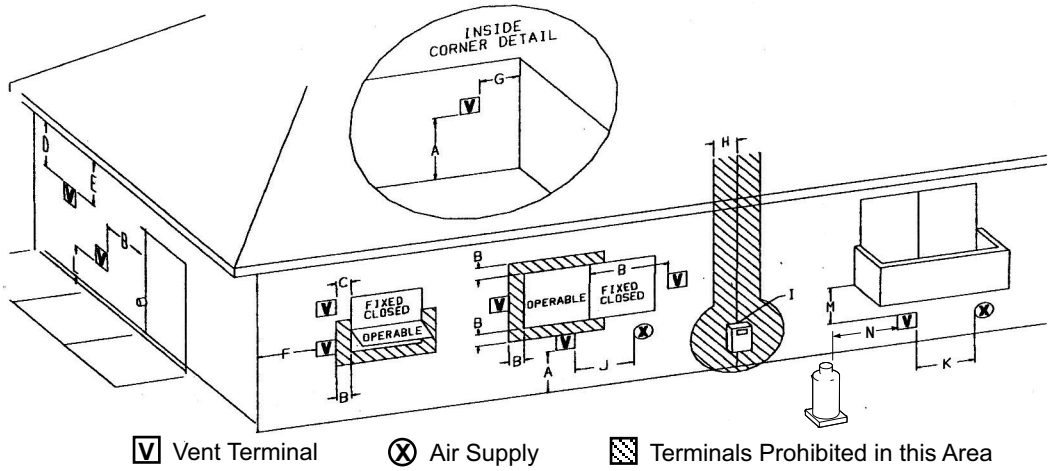

Figure 6.7. Vent Terminal Clearances, Canada and United States

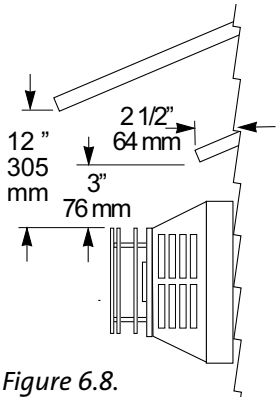

Figure 6.8. Termination Clearance to overhangs.

		Canadian Installations [1]	U.S. Installations [2]
A	Clearance above grade, veranda, porch, deck, or balcony	12 in. (30 cm)	12 in. (30 cm)
B	Clearance to window or door that may be opened	12 in. (30 cm)	9 in. (23 cm) We recommend 12 in. to prevent condensation on a window.
C	Clearance to permanently closed window	12 in. (30 cm)	9 in. (23 cm) We recommend 12 in. to prevent condensation on a window.
D	Vertical clearance to ventilated soffit located above the terminal within a horizontal distance of 2 ft (60 cm) from the center line of the terminal	18 in. (46 cm)	18 in. (46 cm)
E	Clearance to unventilated soffit	12 in. (46 cm)	12 in. (46 cm)
F	Clearance to outside corner	12 in. (46 cm)	9 in. (23 cm) We strongly recommend 12 in. particularly where strong winds prevail.
G	Clearance to inside corner	12 in. (46 cm)	9 in. (23 cm) We strongly recommend 12 in. particularly where strong winds prevail.
H	Clearance to each side of center line extended above a gas meter or regulator	3 ft. (91 cm) within a height 15 ft. above the meter/regulator assembly	*
I	Clearance to service regulator vent outlet	3 ft. (91 cm)	*
J	Clearance to nonmechanical air supply inlet to building or the combustion air inlet to any other appliance	12 in. (30 cm)	9 in. (23 cm)
K	Clearance to a mechanical air supply inlet	6 ft. (1.83 m)	3 ft. (91) cm above if within 10 ft. (3 m) horizontally
L	Clearance above paved sidewalk or paved driveway located on public property	7 ft. (2.13 m) [3]	*
M	Clearance under veranda, porch, deck, or balcony	12 in. (30 cm) [4]	12 in. (30 cm) [4]
N	Clearance to propane tank relief valve and filler connection	5 ft. (1.52 m) [5] / 10 ft. (3.05 m) [6]	5 ft. (1.52 m) [5] / 10 ft. (3.05 m) [6]

1) In accordance with the current CSA B149.1, Natural Gas and Propane Installation Code.

2) In accordance with ANSI Z223.1/NFPA 54, National Fuel Gas Code

** For clearances not specified in ANSI Z223.1/NFPA 54 or CSA B149.1, the clearance will be in accordance with local installation codes and the requirements of the gas supplier.*

3) A vent shall not terminate directly above a sidewalk or driveway which is located between two single family dwellings and serves both dwellings.

4) Permitted only if veranda, porch, deck, or balcony is fully open on a minimum of two sides beneath the floor.

5) Minimum clearance to tanks not filled on site.

6) Minimum clearance to tanks filled on site from bulk truck.

7. Fuel Conversion

The GF 305 DV IPI gas stove is shipped from the factory equipped to burn NATURAL GAS only. If PROPANE gas is to be used as fuel, the appliance must first be converted by using the Manual Valve Propane Conversion Kit 158024 included with the stove. Use Manual Valve Natural Gas Conversion Kit 158025 to revert back to natural gas.

WARNING:

THE CONVERSION KIT IS TO BE INSTALLED BY AN AUTHORIZED SERVICE TECHNICIAN IN ACCORDANCE WITH THE MANUFACTURER'S INSTRUCTION AND ALL CODES AND REQUIREMENTS OF THE AUTHORITY HAVING JURISDICTION. FAILURE TO FOLLOW THESE INSTRUCTIONS COULD RESULT IN SERIOUS INJURY OR PROPERTY DAMAGE. THE QUALIFIED AGENCY PERFORMING THIS WORK ASSUMES RESPONSIBILITY FOR THIS CONVERSION.

IN CANADA:

THE CONVERSION SHALL BE CARRIED OUT IN ACCORDANCE WITH THE REQUIREMENTS OF THE PROVINCIAL AUTHORITIES HAVING JURISDICTION AND IN ACCORDANCE WITH THE REQUIREMENTS OF THE CAN1-B149.1 AND .2 INSTALLATION CODE.

Tools required:

- 1/2" or 13 mm wrench or deep-well socket,
- Torx T20 screw driver
- 1/4" socket driver or spade screwdriver
- 7/16" open-end wrench.
- Small pliers or vice-grip

158028 LP Conversion Kit Contents:

- 1, regulator tower labeled LP
- 1, LP Burner injector: 1.55 mm
- 1, LP Stainless Steel Pilot injector - B .020
- Label A - to be completed and applied to the back of the stove
- Label B - apply to the stove's Rating Plate
- Small valve label - apply to valve body

NOTE: The Rock Wool supplied with this appliance may be sprinkled very sparsely on the front of the burner base to replicate glowing embers. Please be aware that, under minimum vent configurations, sooting may occur with Propane fuel. Should soot develop, use a soft brush to clean the log and remove some or all of the rock wool from the burner.

Fuel Conversion Procedure

1. Turn off gas supply to stove.
2. Remove the Front Plate and use the Latch Tool provided to remove the glass frame and open the firebox. See fig. 2.1, page 5.

   Engage the Latch Tool with the holes in each spring latch and pull the latches forward to disengage it from the frame. Tilt the glass frame forward and lift it out of the stove. See fig. 2.1, page 5.
3. Open the Controls Compartment Door under the firebox. Loosen the Air Shutter wing nut and push it back far as it will travel. See fig. 7.1.
4. **Remove the Burner:** Grasp the burner base at the two large air ports and tilt the front up to disengage it from the firebox. Then tilt it side-to-side and pull it out through the door opening.
5. **Convert the Pilot Injector:**
   - Use the 7/16" wrench to loosen the pilot head base enough to adjust the orifice conversion shutter. **Grasp the pilot bracket with pliers or vice-grips to prevent it from bending out of alignment.** See fig. 7.2. Install the new injector oriented as shown.
   - Replace the pilot head and tighten the base nut ensuring that the hood is oriented to direct flame to the flame sensor and burner carry-over ports. See fig. 14.2, page 29.

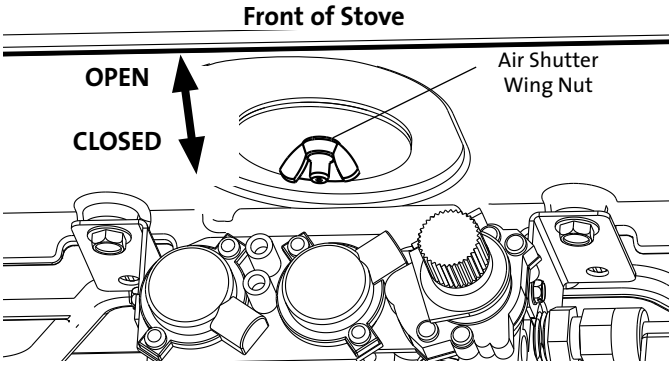

Figure 7.1. The Air Shutter stem is accessed from within the controls compartment.

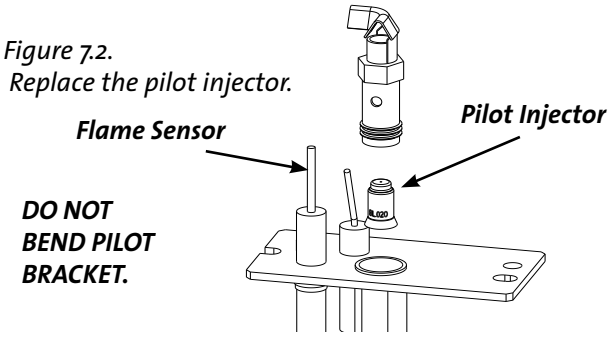

Figure 7.2. Replace the pilot injector.

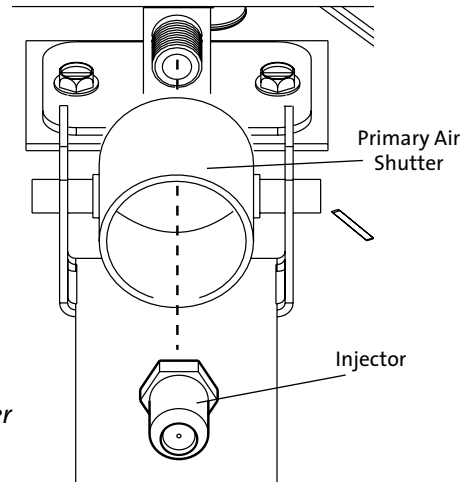

Figure 7.3. Change the burner injector.

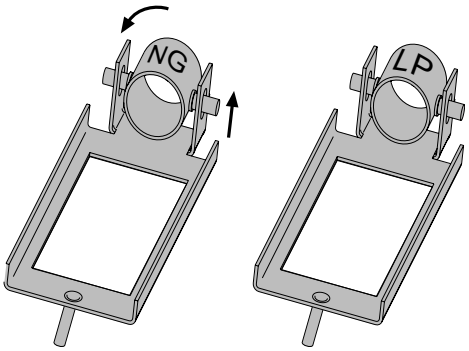

Figure 7.4. Reverse the Air Shutter head to change orientation for the appropriate fuel.

6. **Change the Burner Injector.** See fig. 7.3. Using a 1/2" open end wrench or deep-well socket remove the burner injector from the brass elbow and replace it with the injector supplied in the conversion kit.
7. **Reverse the Air Shutter orientation** to indicate the appropriate fuel. Fig. 7.4.
8. **Baffle Conversion - PROPANE ONLY:**
   - Remove two, 6 mm nuts to detach the Lower Baffle assembly from the firebox. See fig. 7.5.
   - Remove three 6 mm nuts to remove the Exhaust Diverter from the exhust outlet. Replace the nuts on the studs. See fig. 7.5.
   - Re-install the Lower Baffle into the firebox.
9. **Replace the Burner.** Tilt the burner assembly downward to engage the venturi tube with air shutter assembly. The front burner supports must engage with the studs at the front of the firebox. **BE CERTAIN THE BURNER IS LEVEL AND SECURELY ENGAGED WITH THE FIRBOX FLOOR.** When properly positioned, the pilot carry-over porting will be 1 1/8" (28mm) from the pilot head. Fig. 7.6.
10. **Replace the Valve Regulator.** Fig. 7.7. Using a Torx T-20 screwdriver, remove the screws from the front of the original regulator. Remove the regulator components and replace them with the one from the conversion kit.
11. **Apply the identification labels** to the stove where they can be seen by a service person.
    Label A: apply to shroud on the back of stove
    Label B: apply to the rating plate attached to the back of the stove.
    Small Conversion Label: apply to valve.

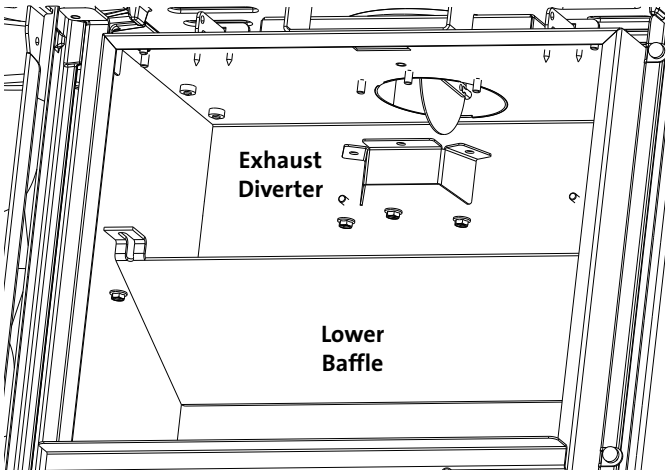

*Figure 7.5. **PROPANE ONLY:** Remove Lower Baffle to access and remove the Exhaust Diverter. Re-install the Lower Baffle.*

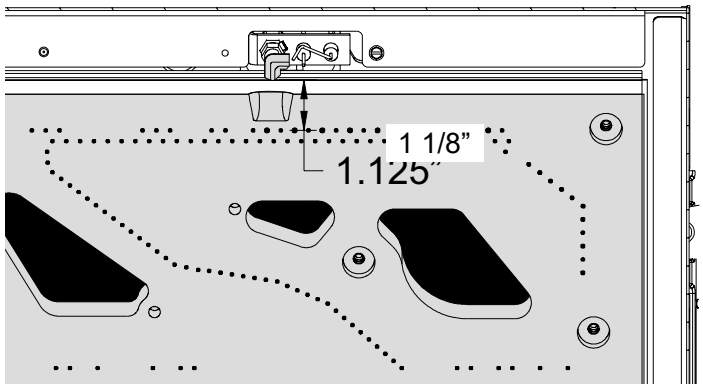

Figure 7.6. Burner and pilot location.

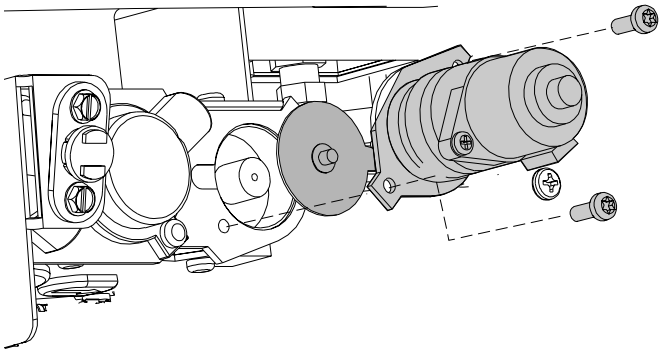

Figure7.7.
Replace original Manual Regulator with LP Regulator.

12. Reassemble the stove, apply gas to the system and check for leaks using a soapy water solution or digital gas detector.

NEVER USE AN OPEN FLAME TO CHECK FOR GAS LEAKS.

13. Confirm correct gas pressure. Use a manometer to check pressures as specified under Section 9, Gas Pressure (page 18).

14. **Adjust the Air Shutter. Fig.** 7.1.
Slide the air shutter stem to the Midpoint position of its travel, then adjust the stem position for the appropriate fuel and flame picture. You will need to position the shutter to provide a gas/air mixture that will promote the best combustion efficiency and flame picture for the particular installation.

- ***Push the shutter stem back (to the rear) to restrict air.***
- ***Pull the shutter stem forward (toward you) to open the shutter and increase air.***

With some experimentation, you will find the shutter position that works best for the particular installation.

- ***Run the stove at least 15 minutes to let the burner settle-in before making incremental adjustments (1/8").***

ALWAYS REFER TO THE LIGHTING INSTRUCTIONS ON THE INSIDE BACK COVER OF THIS MANUAL.

RE-INSTALL THE TOP PLATE BEFORE CONNECTING VENT TO THE STOVE.

8. Gas Supply Connection

- Route the gas supply line from the valve back to the left leg. Use the Left Utility Cover Plate included with the stove to hide the gas line between the plate and the leg. See Appendix, fig. 17.8, page 43.
- The gas supply line connection is made to the left side of the valve. The gas supply line should be 3/8" npt with a 1/2" diameter supply, or the appropriate size to provide sufficient gas pressure to the valve regardless of the input setting.
- The use of Flexible Gas Appliance Connectors is acceptable in many areas in the U.S. However, Canadian methods vary depending on local code.
- **ALL INSTALLATIONS MUST COMPLY WITH LOCAL CODE OR IN THE ABSENCE OF LOCAL CODE, MUST COMPLY WITH THE MOST RECENT EDITION OF THE NATIONAL FUEL GAS CODE ANSI Z223.1/NFPA 54 OR CAN-B149.**
- All codes require a gas shut-off valve (gas cock) and union, to be installed in the supply line, and in the same room as the appliance. This allows for the disconnection of the stove for servicing and maintenance. See fig. 8.1.

A T-HANDLE GAS COCK IS REQUIRED IN MASSACHUSETTS TO COMPLY WITH CODE 248CMR.

- Secure all joints tightly using appropriate tools and sealing compounds. For propane units be sure to use compounds that are propane resistant. Turn on gas supply and test for gas leaks using a soapy water solution or digital gas detector. Never use an open flame to check for leaks.

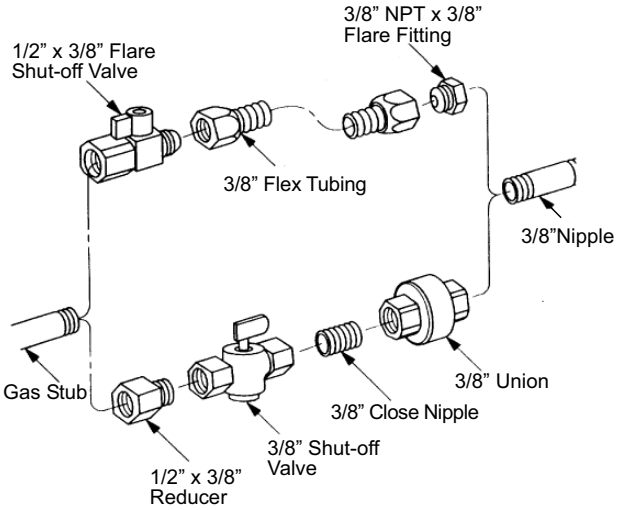

Figure 8.1. Supply valve connection fittings.

9. Gas Pressure

Correct gas pressure is essential for efficient and safe operation of the GF 305 DV IPI gas stove. It is important that the correct pressure is established at the time of the installation. Proper gas pressure provides a consistent flow of gas to the appliance and is instrumental in checking for gas leaks.

Pressure Test: Attach a manometer to the appropriate test point on the valve. See fig.9.1.

The gauge connections are located on the front of the valve. Connections are identified by:

A - for Manifold Pressure (the amount of gas that is coming out of the valve to the burner.)

B - for Inlet or Supply Pressure (the amount of gas coming to the valve.)

ALWAYS TEST PRESSURES WITH VALVE CONTROL KNOB SET ON HIGH.

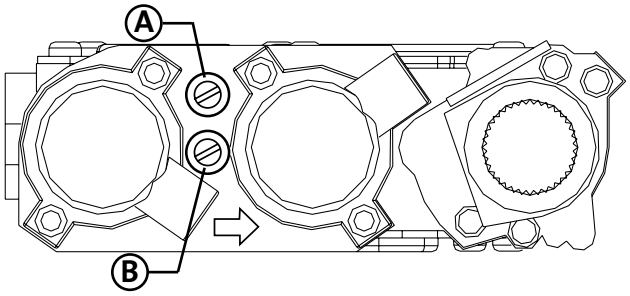

Figure 9.1. Pressure test points.

INLET GAS PRESSURES
(inches water column)

	MIN	MAX
NATURAL GAS	5.0	7.0
PROPANE	12.0	14.0

The appliance and its appliance main gas valve must be disconnected from the gas supply piping system during any pressure testing on that system at test pressures in excess of 1/2 psig (3.5 kPa).

The appliance must be isolated from the gas supply line by closing its individual manual gas shut-off valve (gas cock) during any pressure testing of the gas supply piping system that is equal to or less than 1/2 psig (3.5 kPa).

MANIFOLD PRESSURES
(inches water column)

	MIN	MAX
NATURAL GAS	1.1	3.5
PROPANE	6.4	10.0

10. High Altitude Adjustment

The decreased atmospheric pressure of higher altitudes affects heat value of gaseous fuels. Most gas suppliers derate the gas intended for use at elevations above 2000 feet. Check with your gas supplier before performing derate adjustment to the burner. If the gas supplier does not derate fuels, install High Altitude Adjustment Kit 158026 for Propane and Kit 158027 for Natural gas.

U.S & Canada per
ANSI Z21.88-2009 • CSA 2.33-2009, CAN/CGA 2.17

Orifice Sizes for 610-1370 meters (2000-4500 ft.):
Natural Gas: #39
Propane: 1.45 mm

See data on the stove rating plate for additional information. At higher altitudes, consult the local gas distributor or the authority having jurisdiction for proper rating methods. If the installer must convert the unit to adjust for varying altitudes, the information label must be filled out and applied to the appliance at the time of the conversion.

Derating Procedure

- Follow the steps for Burner Injector replacement in the Fuel Conversion procedure on pages 16. Use the injectors supplied with the adjustment kit. Detailed instructions are also included in the kit.
- Conduct gas leak and gas pressure tests as detailed the preceding section of this manual.
- Conduct system check and flame picture adjustments as specified on page 28.

INSTALLER: Record the appropriate information and apply the high altitude conversion label provided to the rating plate on the appliance. See fig. 10.1.

This appliance has been converted for use at an altitude of_____ .
Orifice Size: _____ Manifold Press. _____
Input Btu/Hr. _____ Fuel Type _____
Date: ___/___/___ Converted by:_____
Cet appreeil a été converti au _____ Injecteur_____
Pression à la tubulure d'alimentation _____
Déoit calorifique _____

Figure 10.1. High Altitude Conversion Label.

11. Optional Equipment

Optional Wall Thermostat 750003

PLEASE NOTE: To avoid interference between the two control devices, we advise against connecting a wall thermostat to the stove if a remote control will also be used as a thermostat.

Use only a 750 millivolt DC two-wire circuit wall thermostat with this appliance. The thermostat should be placed in the same room as the heater, typically 5 feet off the floor. Avoid drafty areas or any area that may affect the accuracy of the thermostat.

The thermostat should be connected to the terminal block using a minimum of 16 gauge wire with a maximum length of 25 feet of wire.

Connect the two thermostat wire leads to the terminals on the burner terminal block located on the back of the control switch plate to the left of the valve. Do not overtighten the connections. IT IS NOT NECESSARY TO DISCONNECT ANY OTHER WIRES. See Fig. 11.1.

For thermostatic operation, set the On/Off/T-Stat switch to the T-Stat position. Set the pilot mode to either IPI or CPI.

At the thermostat, the two wires should be connected to the two connection screws on the thermostat base plate per the manufacturer's instructions.

CAUTION:

LABEL ALL WIRES PRIOR TO DISCONNECTION WHEN SERVICING THE CONTROLS. WIRING ERRORS CAN CAUSE IMPROPER OR DANGEROUS OPERATION. ALWAYS VERIFY PROPER OPERATION AFTER SERVICING THE APPLIANCE.

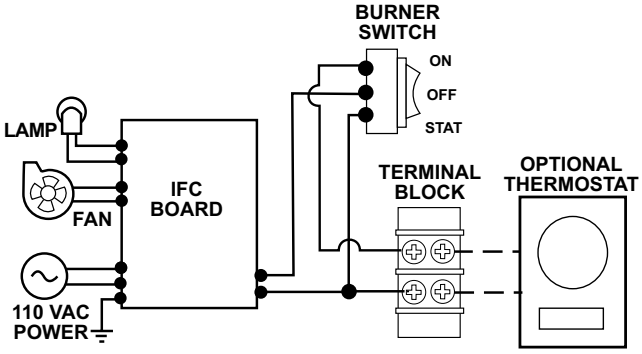

Figure 11.1. Accessory wiring diagram.

Firebox Panel Kits

Fluted Firebox Liner Kit 158034
Black Reflective Glass Panel Kit 158035

Fluted Panel Contents:
- Rear Panel 226210
- Left Side Panel 226211
- Right Side Panel 226212

Reflective Black Glass Contents:
- Rear Panel 226087
- Left Side Panel 226088
- Right Side Panel 226089
- Cotton Gloves, 2

INSTALL FUEL OR HIGH ALTITUDE CONVERSION KITS BEFORE INSTALLING PANEL KITS.

THE PANELS ARE FRAGILE.
SUPPORT PANELS WITH BOTH HANDS.

HANDLE THE GLASS PANELS WITH THE COTTON GLOVES PROVIDED TO MINIMIZE FINGERPRINTS. SKIN OILS ARE DIFFICULT TO REMOVE FROM THE GLASS SURFACE.

This procedure applies to both kits.

ORIENT GLASS PANELS WITH THE SMOOTH SIDE FACING OUT.

1. Place the Rear Panel flat against the back wall, resting behind the small log peg on the rear shelf. When installed, the two side panels will hold the rear in place.
2. The side panels rest on the shelves at each side of the burner. Each panel is secured by a single **Retainer Bracket** located at the inside front upper corner of the firebox. Loosen the 10 mm retainer nut and turn the bracket out to position the panel against the wall.
3. Turn the bracket head back in against the panel and **tighten the nut snug.** See fig. 11.2.

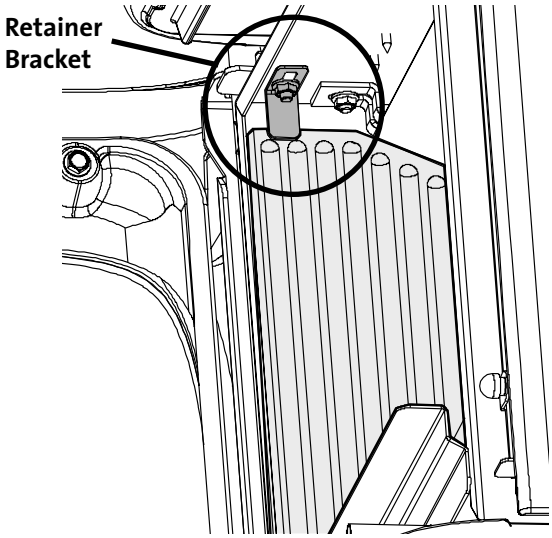

Figure 11.2. Firebox panels installation.

11. Premium Upgrade Kit
#158030 - NG
#158031 - LP

Kit Contents:
- Flame Control Kit (NG, 158032 / LP, 158033)
- Accent Lamp Kit 157469
- Blower Kit with Multifunction Remote 158023

READ THESE INSTRUCTIONS BEFORE BEGINNING INSTALLATION. INSTALL EACH COMPONENT IN THE ORDER PRESENTED HERE.

EXCEPT AS NOTED, ALL INSTRUCTIONS ARE ORIENTED FACING THE FRONT OF THE STOVE.

Flame Control Installation

1. Using a Torx T-20 screwdriver, remove the two screws from the front of the manual regulator and remove those components as shown in fig. 11.3.
2. Confirm the appropriate fuel type by the label on the Flame Control motor. Install the motor using the new screws included with the kit.
3. Connect the wire harness to terminal (M) on the near side of the IFC board, fig. 11.3.
4. If appropriate, follow the instructions for fuel conversion beginning on page 15.

SEE PAGES 32-35 FOR REMOTE CONTROL OPERATION.

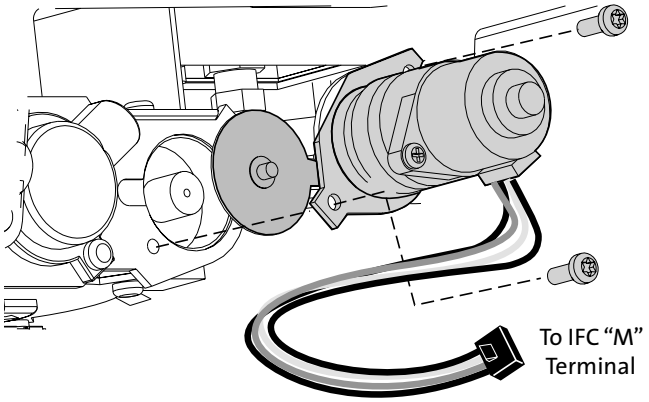

Figure 11.3. Flame Control Motor installation.

Accent Lamp Kit 157469

INSTALL THE LAMP BEFORE CONNECTING THE STOVE TO VENTING.

Contents:
1. Lamp Box
2. Wire Harness
3. Lens
4. Gasket
5. Light Deflector Plate

Tools Required:
- 13 mm wrench
- Safety goggles
- Work gloves

1. Lift the Top Plate from the stove.
2. Refer to figs. 11.4 and 11.4a. Remove the two M8 hex head bolts (A), nuts (B), and steel Lamp Cover Plate from the firebox top using a 10 mm socket wrench. Discard the cover plate.
3. Install the Gasket, Lens, and Lamp Box over the opening on the firebox using the two bolts (A) previously removed.
4. Using the nuts previously removed, secure the Light Shade plate to the bolts on the underside of the lamp assembly inside the firebox. **NOTE: ORIENT THE SHADE FLANGE TO THE FRONT OF THE STOVE.**
5. Route the lamp wire harness over and down through the right rear Air Duct as shown in Fig. 11.5.

   Connect the harness (A) to the terminal labelled "Lamp" on the right side of the IFC board. See fig. 11.7 on page 22.
6. Replace the Top Plate.

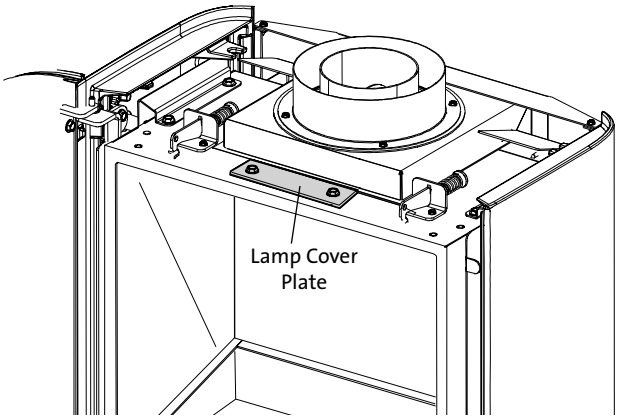

Figure 11.4. Remove the Lamp Cover Plate.

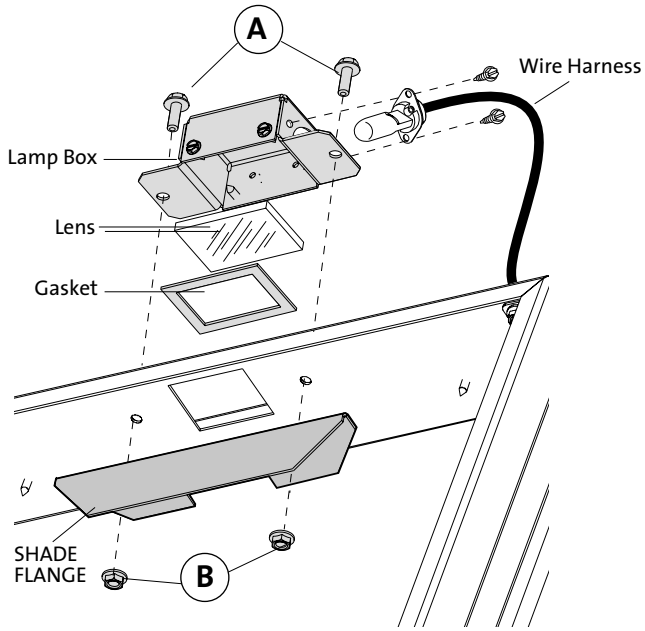

Figure 11.4a. Accent Lamp assembly. ORIENT THE SHADE FLANGE AS SHOWN.

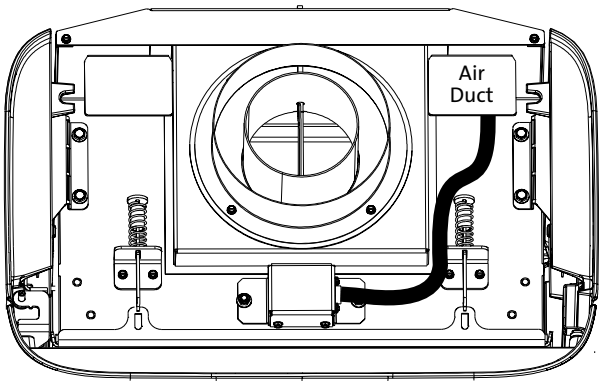

Figure 11.5. Accent Lamp Harness routing.

Blower Kit 158023

- **THIS BLOWER MUST BE ELECTRICALLY GROUNDED IN ACCORDANCE WITH LOCAL CODES OR, IN THE ABSENCE OF LOCAL CODES, WITH THE CURRENT ANSI/NFPA 70, NATIONAL ELECTRICAL CODE OR CSA C22.1- CANADIAN ELECTRICAL CODE.**
- **THIS UNIT IS SUPPLIED WITH A THREE-PRONG (GROUNDING) PLUG FOR PROTECTION AGAINST SHOCK HAZARD AND SHOULD BE PLUGGED DIRECTLY INTO A PROPERLY GROUNDED THREE-PRONG RECEPTACLE. DO NOT CUT OR REMOVE THE GROUNDING PRONG FROM THE PLUG.**
- **ALWAYS DISCONNECT THE POWER SUPPLY WHEN PERFORMING ANY SERVICE ON THE APPLIANCE.**

Contents

- Blower
- Blower Shroud
- IFC Blower wire harness
- Remote Transmitter
- M8 x 15 mm hex hd bolts 2
- #8 x 12 sheet metal screws, 2

Tools Required

- 13 mm open end wrench or socket
- 7mm nut driver
- Safety glasses
- Work gloves

The blower functions are controlled by the Remote Transmitter hand set which is included with the kit.

See Remote Control initialization and operation instructions on pages 30-33.

1. Orient the blower housing with the outlet to the rear and the air inlet facing down. Engage the housing with the two pegs, (A) in the center of the cabinet floor. Fig. 11.6.
2. Connect the blower power lead (B) to the IFC board terminal labelled “FAN”. See Fig. 11.7.
3. Connect the blower ground lead to the ground terminal at the front of the IFC using the nut provided on the board. Fig. 11.7.
4. Attach the Blower Shroud to the side flanges at the rear of the cabinet floor using the two #8 X 12 mm sheet metal screws. See Fig. 11.8, (A).
   Attach the upper flange of the shroud to the stove bottom plate using the two, M8 x 15 mm hex bolts (B) from this kit.

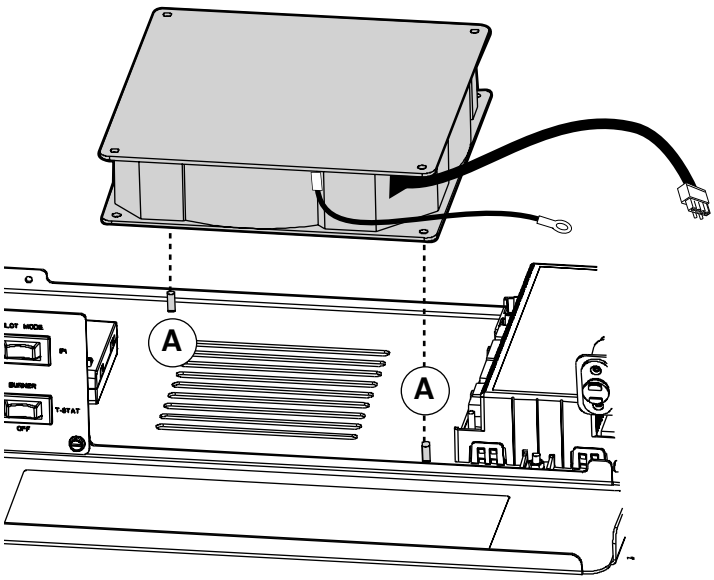

Figure 11.6.
Engage the blower housing on the compartment floor pegs.

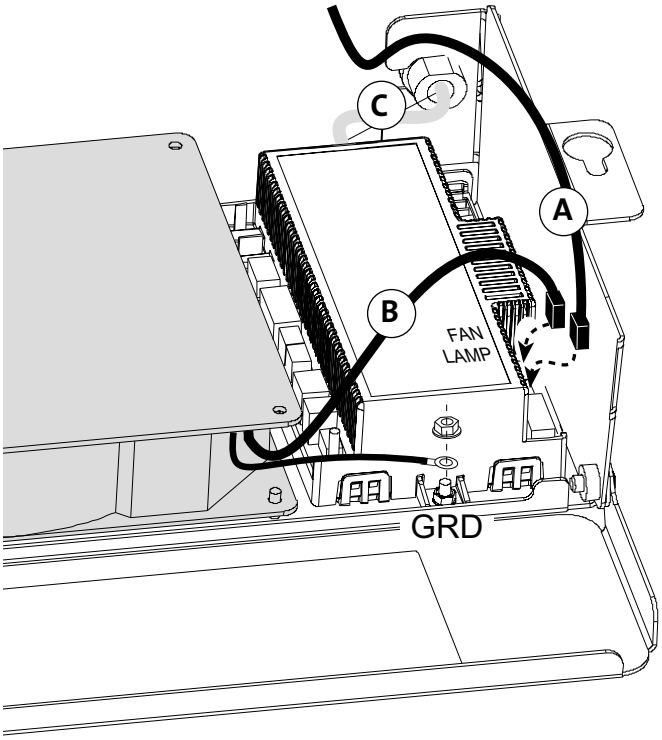

Figure 11.7. Blower & Lamp Terminal Connections.

5. The power cord (C) is routed to the **right rear** stove leg behind the Right Utility Cover. It may be removed to accommodate installation requirements as necessary. See fig. 11.9 and fig. 17.9, page 43.
6. Connect the power cord to the nearest house current outlet.

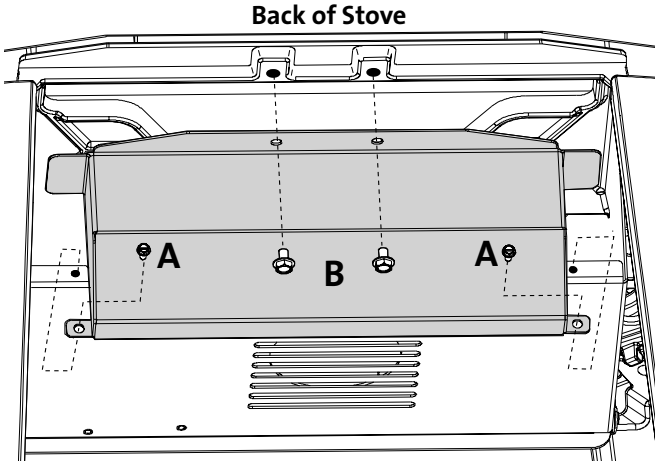

Figure 11.8. From the back of the stove, secure Blower Shroud to the stove bottom.

12. Log Set Installation

NOTE: LOG COMPONENTS ARE FRAGILE.
WEAR SAFETY GLOVES AND HANDLE LOGS WITH CARE.

Before beginning assembly...

Lay out all the components and take a few minutes to locate the identification numbers engraved into each part. The numbers correspond to those shown in the photographs on these pages and also to the order of assembly. Install the log set parts in the order presented here. **Traditional Log Set installation begins on page 26.**

NOTE: The Rock Wool supplied with this appliance may be sprinkled very sparsely on the front of the burner base to imitate glowing embers.
Please be aware that, under minimum vent configurations, sooting may occur with Propane fuel. Should soot develop, use a soft brush to clean the log and remove some or all of the rock wool from the burner.

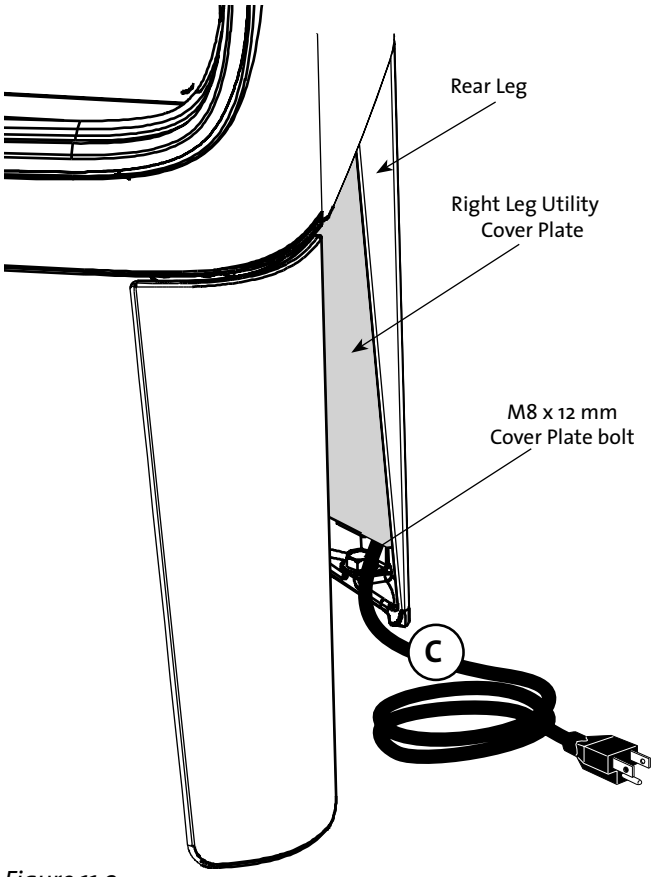

Figure 11.9.
Power cord routing.

BE SURE TO KEEP THE PILOT CARRY-OVER PORTS CLEAR OF OBSTRUCTIONS.

Beach Fire Log Set #158020

#1	Left Base Rock	226216
#2	Right Base Rock	226217
#3	Lower Left Log	226218
#4	Lower Right Log	226219
#5	Upper Left Log	226220
#6	Upper Right Log	226221
#7	Left Stone	226222
#8	Center Stone	226223
#9	Right Stone	226224
Bag,	Locator Pins, Qty. 3	226227

Step 1. *Set the three, bagged locator pins into the holes at the left side of the burner base.*

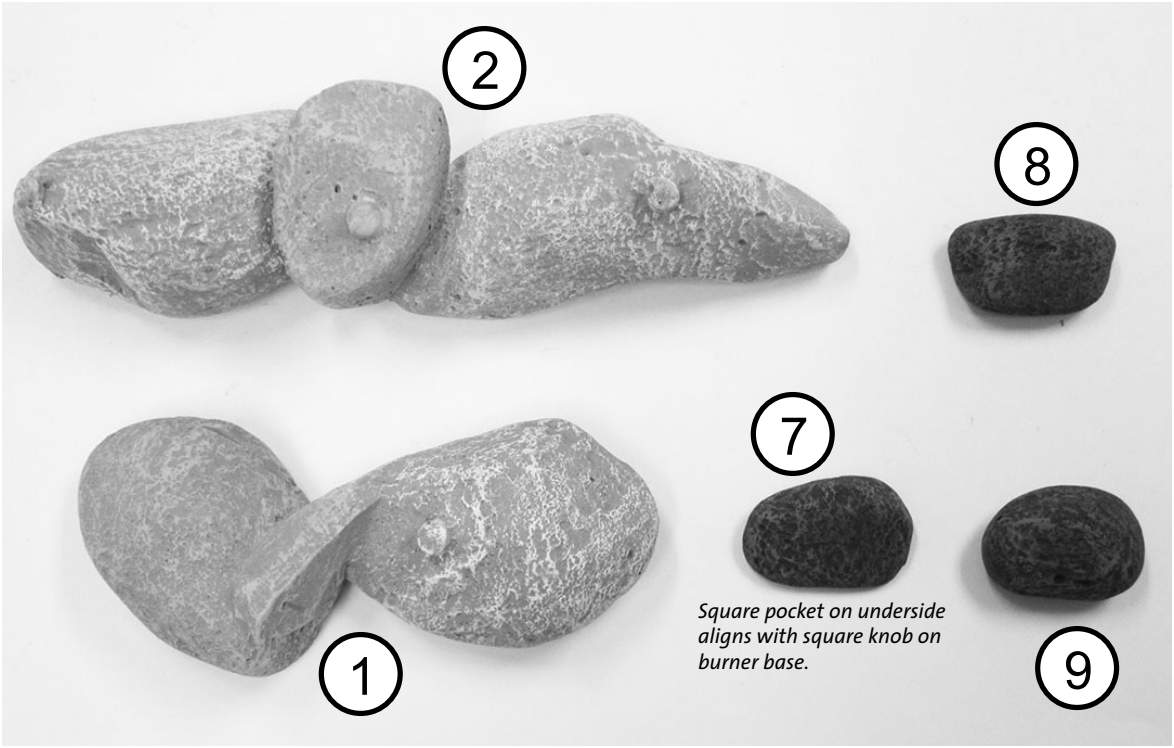

Figure 12.2. Beach Fire Rock and Stone identification.

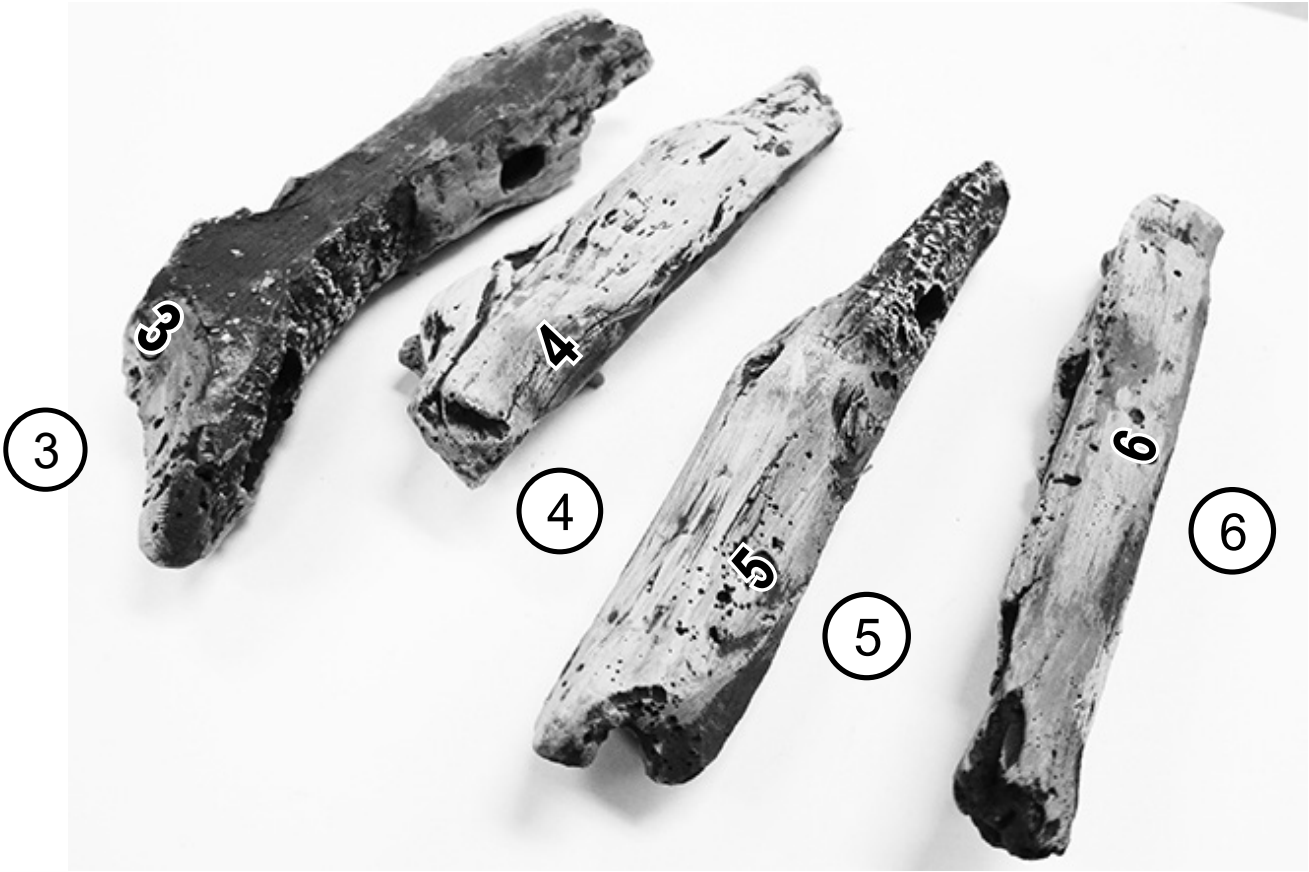

Figure 12.3. Beach Fire Log identification.
Look for the ID numbers imprinted into the backside of each log.

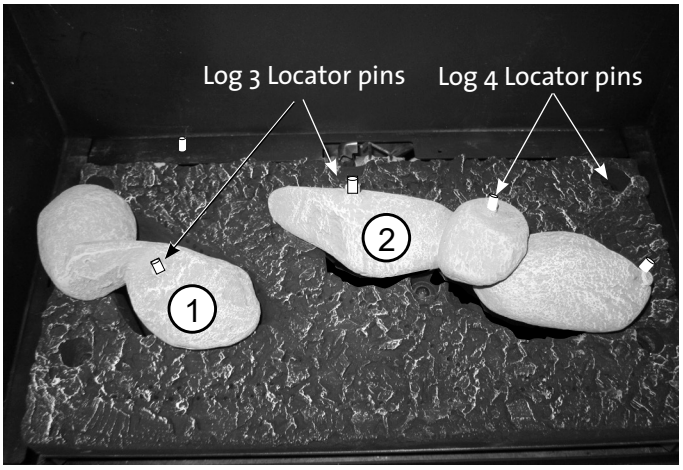

Step 2. *Engage Base Rocks 1 and 2 with the burner locator pins shown in Step 1, page 23. Note pins for logs 3 and 4.*

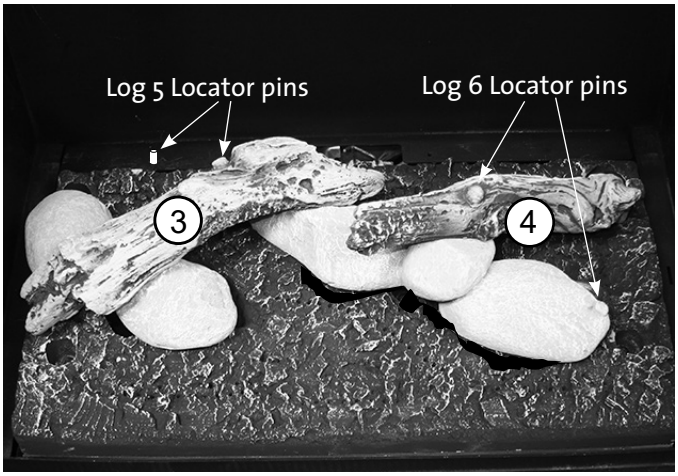

Step 3. *Engage the Lower Logs 3 and 4 with the adjacent log locators on the rocks. Note pins for logs 5 and 6.*

Step 4.

- *Engage the Upper Logs 5 and 6 with the adjacent pins on the lower logs.*
- *Use a tooth brush to sparingly spread a thin, porous layer of rock wool tufts over the front area of the burner base.*

PROPANE NOTE: Soot may develop with Propane fuel in minimum vent configurations. Should soot occur, remove the rock wool.

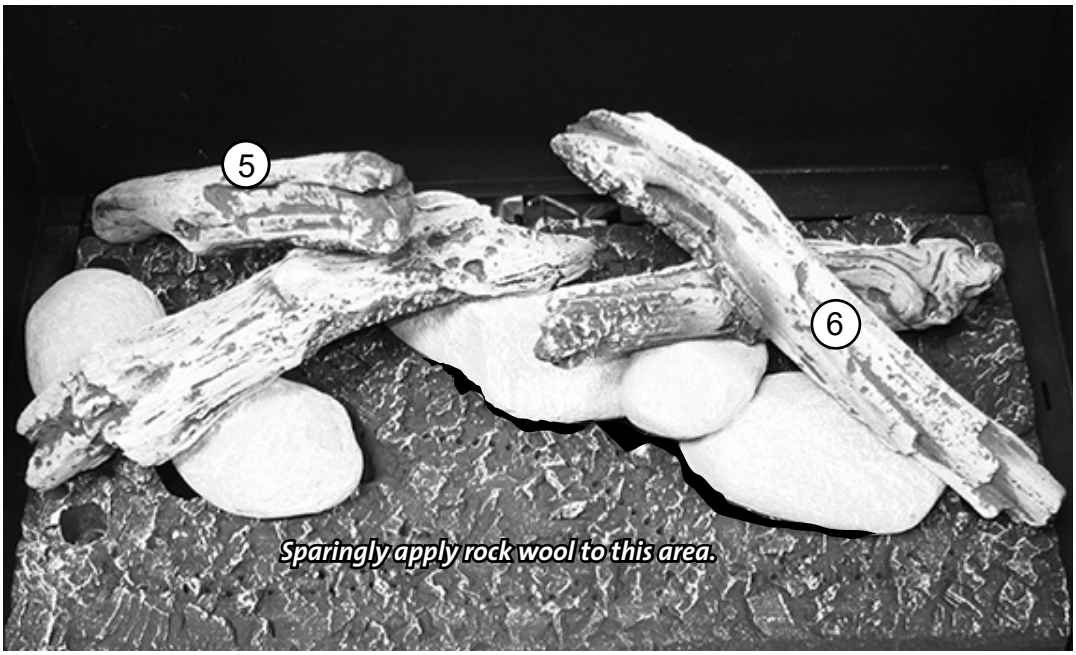

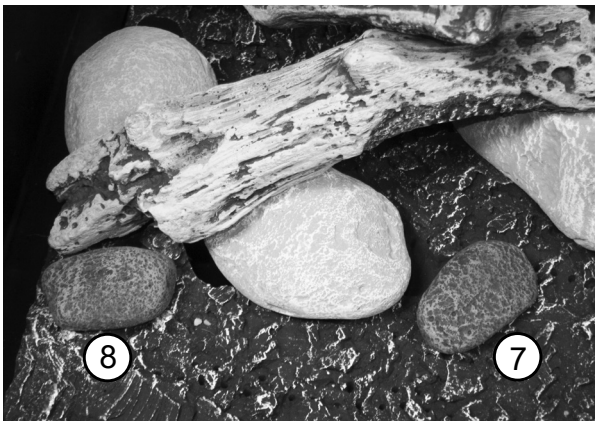

Step 5.

Place Stones 7 and 8 in their respective pockets on the base.

Step 6.

Place Stone 9 on the base.

Figure 12.4.
Traditional Log Set identification. White outlined numbers show the relative position of ID number engraved on log.

Traditional Log Set #158021

#1	Lower Left Log	226228
#2	Lower Right Log	226229
#3	Left Center Log	226230
#4	Right Center Log	226231
#5	Upper Left Log	226232
#6	Upper Right Log	226233
Bag, Locator Pins, Qty. 3		226227

Step 1.

Set the three bagged locator pins into the holes at the left side of the burner base.

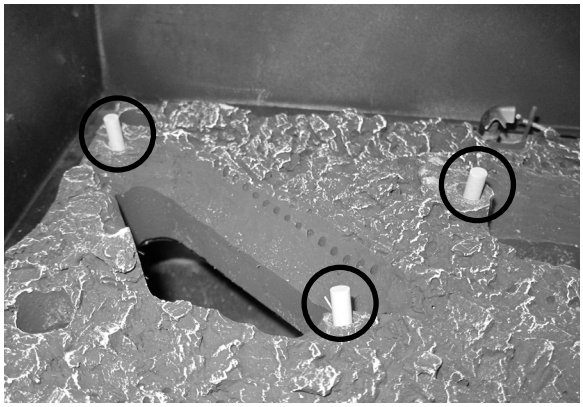

Step 2.

Engage Lower logs 1 and 2 with the pins in the burner base.

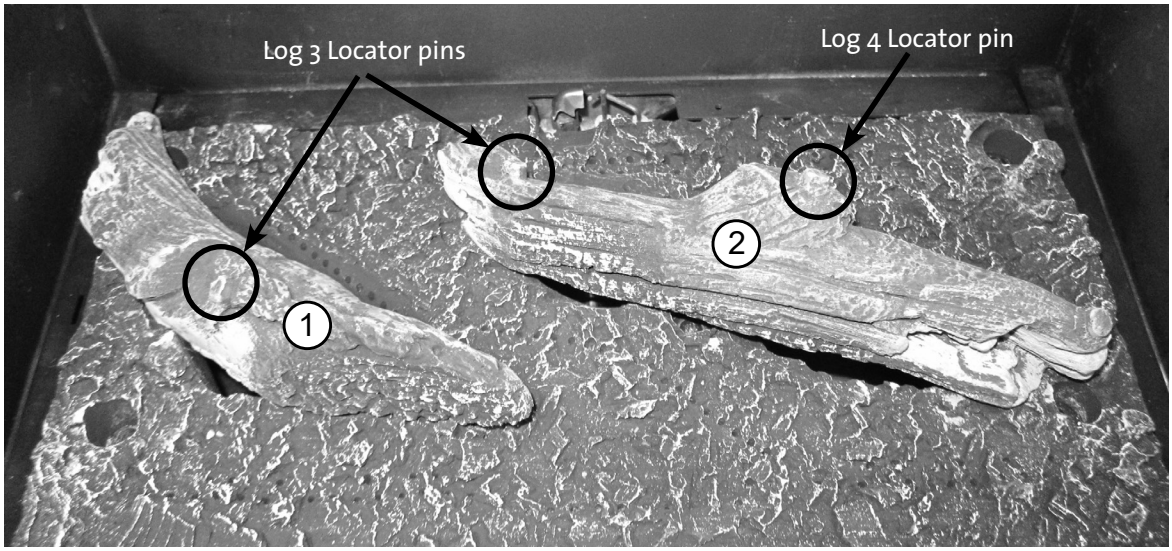

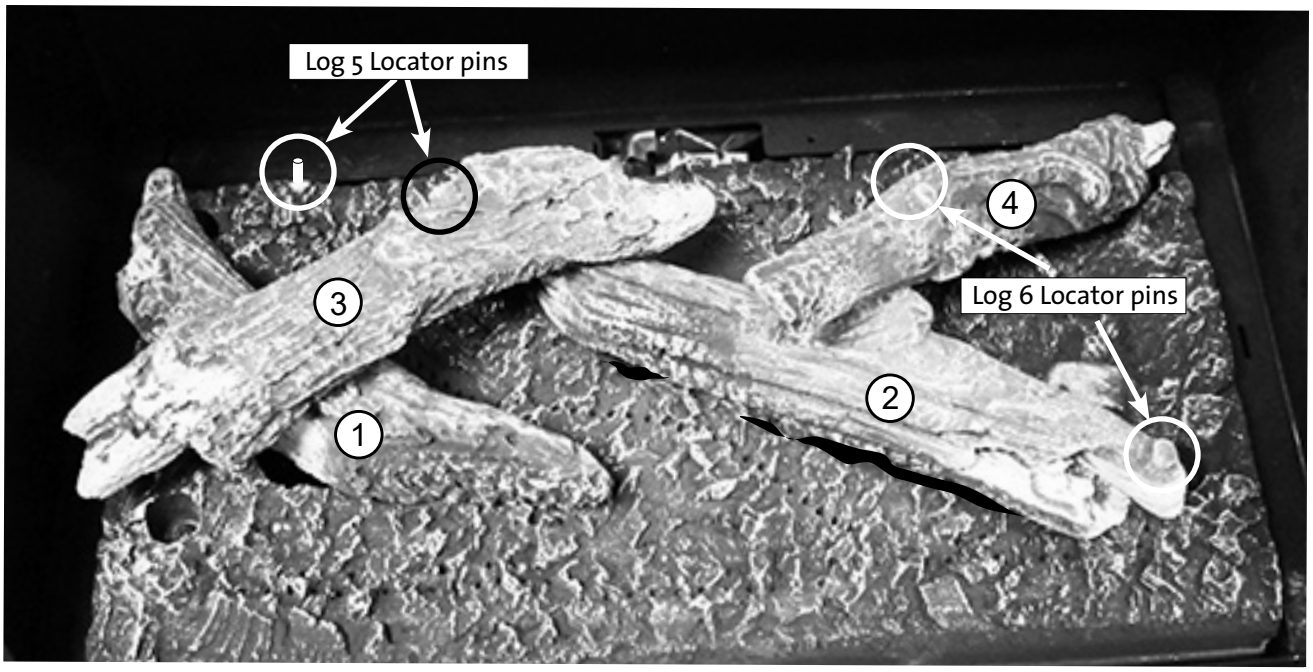

Step 3.

- *Engage the holes in Log 3 with the locators on Logs 1 and 2.*
- *Engage the hole in Log 4 with the locator on Log 2.*
  Set the end of Log 4 into the pocket in the rear corner of the burner base.

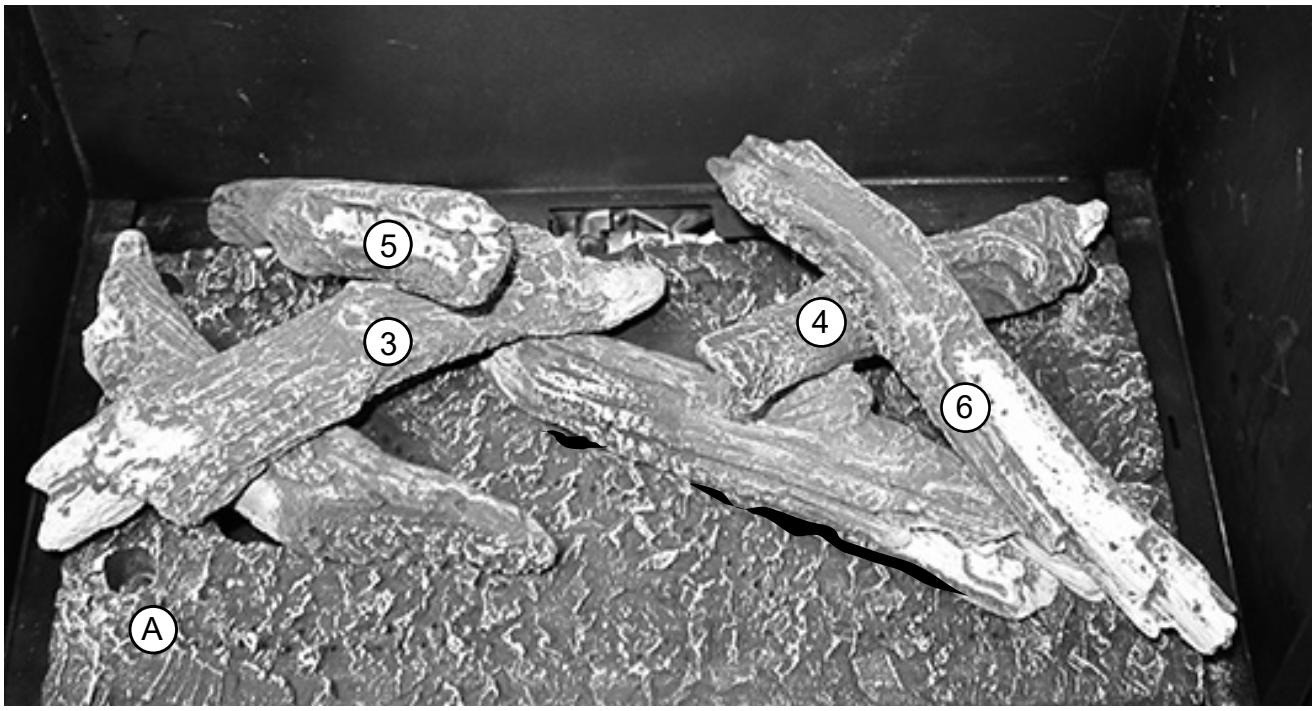

Step 4.

- *Engage the hole in Log 5 with the adjacent locator in Log 3 shown in Step 3 photo.*
  Engage the slotted end of Log 5 with the pin on the rear firebox shelf shown in Step 3 photo.
- *Engage the two holes in Log 6 with the locators on Logs 4 and 2 . |*
- ***Use a tooth brush to** sparingly spread rock wool tufts over the front area of the burner base.*
  Use fibers to hide the left corner bolt hole, "A".

PROPANE NOTE: Soot may develop with Propane fuel in minimum vent configurations. Should soot occur, remove the rock wool.

13. System Check

1. PURGING THE GAS LINE: When lighting the appliance for the first time, it will take a few moments to clear the gas line of air. Once this purge is complete, the appliance will operate as described in the lighting instructions. From a cold start, it may be helpful to let the pilot light burn in CPI mode for 10 - 15 minutes to establish positive draft, before turning the burner on. See the procedure on the inside back cover of this manual. Subsequent burner starts will not require purging the gas line unless the supply line is shut off.
2. PILOT FLAME: You can monitor the pilot flame located behind the burner at the rear of the firebox. The pilot flame should be steady - not lifting or floating. The flame should be blue in color around the pilot hood, with traces of yellow toward the outer edges.

   The pilot flame should engulf the top 1/8" of the flame sensor. The pilot flame should project from the pilot hood port toward the burner carry-over ports. Adjust the pilot flame using the adjustment screw to the left of the valve regulator. See fig. 13.1.
3. MANUAL BURNER ADJUSTMENT: This stove is equipped with a variable gas control valve that allows manual adjustment of the flame height and heat output. To adjust the flame intensity, rotate the regulator knob.
   Flame height will adjust approximately 33% between the LOW and HIGH settings.

   NO SMOKE OR SOOT SHOULD BE PRESENT. CHECK LOG PLACEMENT IF ANY SOOT OR SMOKE IS PRESENT. IF SOOT OR SMOKE PERSISTS, THE AIR SHUTTER MAY NEED TO BE ADJUSTED.

   See Flame Appearance / Air Shutter for air shutter settings and adjustments. Note: The more offsets there are in the vent system, the greater the need for an air shutter adjustment.

WARNING:
AIR SHUTTER ADJUSTMENTS SHOULD ONLY BE PERFORMED BY A QUALIFIED, PROFESSIONAL SERVICE TECHNICIAN.

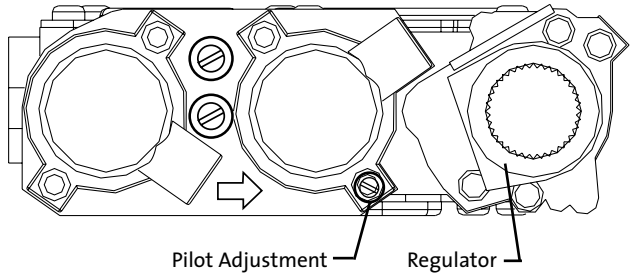

Figure 13.1. Manual flame regulation.

INITIAL FIRING PROCESS - Heat-curing the Stove Paint

This appliance has been painted with the highest quality coating used in the hearth industry. Manufacturers have selected this product because it has been proven durable, colorfast, and beautiful at temperatures up to 1200°F/650°C. Although the paint has been air-dried at the factory, it must be heat-cured in order to maximize its coating properties and durability. This process occurs during initial firing of the appliance and will generate odor and some visible smoke.

We recommend you do the following BEFORE operating the appliance for the first time:

1. **Ventilate:** Open doors and windows and use a fan to circulate fresh air throughout the room.
2. **Vacate:** The fumes are non-toxic, but can be uncomfortable for babies, small children, pregnant women, elderly, pets, or anyone having breathing difficulties.

Gas Appliance Curing Process

1. *After the installer has confirmed proper burner function at all heat levels*, the homeowner should operate the appliance at a low setting for several hours, followed by several hours operation at a high setting.
2. Off-gassing by paint and log set ceramic material may leave a white, powdery deposit on the inside surface of the glass panel. ***This residue must be removed using a non-abrasive hearth gas appliance glass cleaner or warm water to prevent permanent etching of the glass.***

   DO NOT USE AMMONIA-BASED CLEANERS.

See OPERATION, page 30, for detailed, day-to-day operating procedures.

14. Flame Appearance / Air Shutter Adjustment

The GF 305 DV IPI gas stove is shipped from the factory equipped to burn Natural gas and the air inlet shutter has been set to provide optimal combustion efficiency under a variety of venting configurations. The air shutter may be adjusted, however, to accommodate the conditions of your individual installation and to provide the desired flame picture. Other installation-related variables can also affect the flame picture:

Too large an air setting - the appliance will generate a flame that is blue and transparent, or an "anemic" flame.

Too small an air setting - the appliance will generate very long yellow flames resulting in black soot deposits on the logs, on the inside walls of the appliance, and potentially on the exterior termination cap. Sooting is caused by incomplete combustion in the flames and/ or insufficient combustion air entering the air shutter opening.

WARNING: AIR SHUTTER ADJUSTMENTS SHOULD ONLY BE PERFORMED BY A QUALIFIED PROFESSIONAL SERVICE TECHNICIAN.

To adjust the air shutter:

1. Open the Controls Access Door and loosen the wing nut shown in fig. 14.1. Slide the wing nut stud forward toward yourself to open the air shutter and back to provide less air. Before making any adjustments, start at the mid-point of the total range of adjustment.
2. Allow the stove to burn for 20-30 minutes on the HIGH setting, observing the flame continuously. If the flame appears weak, slow, or sooty, increase the air shutter opening in 1/16" - 1/8" increments until the desired flame picture is achieved. Allow the flames a few minutes to "settle-in" after each adjustment.
3. Tighten the wing nut to secure the shutter at the desired setting.

NOTE: The Rock Wool supplied with this appliance may be sprinkled very sparsely on the front of the burner base to imitate glowing embers. Please be aware that, under minimum vent configurations, sooting may occur with Propane fuel. Should soot develop, use a soft brush to clean the log and remove some or all of the rock wool from the burner.

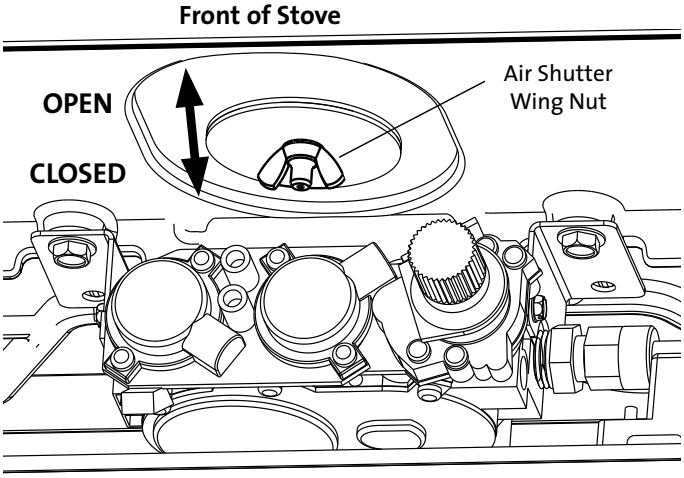

Figure 14.1.
Pull the shutter forward to increase primary air.
Push it back to restrict air.

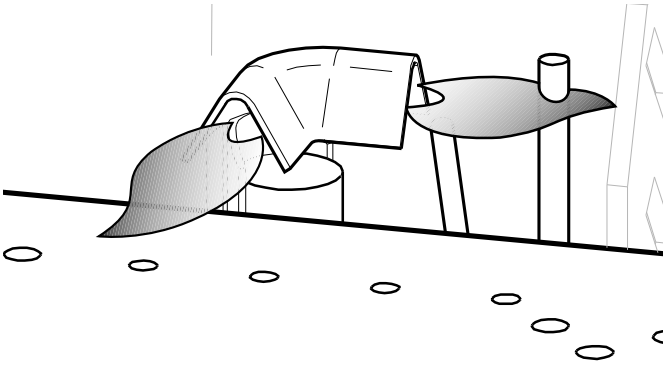

Figure 14.2. Normal pilot flame picture.

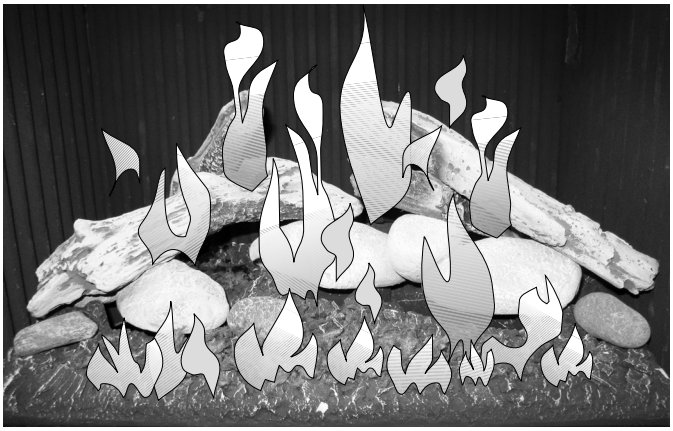

Figure 14.3. Normal burner flame picture.

15. Operation

Important Notes

Check the build date on the shipping crate label. If it has been more than 6 months since the build date, be prepared to replace the backup batteries.

1. For the first several hours of operation, it is common to detect some odor as the metal and manufacturing materials cure under heat. This condition is temporary and can be alleviated by allowing plenty of fresh air to circulate through the area.
2. Condensation may develop on the glass upon each lighting of the appliance. This "fog" will disappear as the glass heats.
3. **IMPORTANT: It will be necessary to clean the glass after the first few fires. A white powdery residue will be evident which results from the burner media curing. *Use a non-abrasive hearth gas appliance glass cleaner and warm water.***

   IF THE GLASS IS NOT CLEANED, THIS RESIDUE CAN CAUSE THE GLASS TO BECOME PERMANENTLY ETCHED.

   DO NOT USE AMMONIA-BASED CLEANERS.
4. Keep the control compartments and area under the appliance free of dust. Always keep the appliance area clear and free from combustible materials, gasoline and other flammable liquids.
5. This appliance can be operated with a continuously burning pilot flame. Exercise caution when using household products containing combustible vapors.
6. **CAUTION: DO NOT OPERATE THIS APPLIANCE WITH THE GLASS PANEL REMOVED, CRACKED OR BROKEN. REPLACEMENT OF THE GLASS SHOULD BE DONE BY A LICENSED OR QUALIFIED SERVICE PERSON. USE ONLY REPLACEMENT GLASS PROVIDED BY YOUR AUTHORIZED JØTUL DEALER. NEVER SUBSTITUTE ANY OTHER TYPE OF GLASS.**

   REMOVE GLASS ONLY FOR ROUTINE MAINTENANCE.

   ALWAYS HANDLE GLASS CAREFULLY.

WARNING:

READ AND UNDERSTAND ALL OPERATING INSTRUCTIONS BEFORE ATTEMPTING TO OPERATE THIS APPLIANCE. DO NOT ALLOW ANYONE TO OPERATE THIS APPLIANCE WHO HAS NOT READ AND UNDERSTOOD THESE INSTRUCTIONS. KEEP THE REMOTE CONTROL TRANSMITTER WHERE CHILDREN CANNOT REACH IT.

WARNING:

SEVERE INJURY. THIS APPLIANCE CAN BE SET TO OPERATE THERMOSTATICALLY. BE AWARE THAT THE APPLIANCE MAY BE VERY HOT EVEN WHEN THE BURNER IS NOT APPARENTLY OPERATING. KEEP CHILDREN AWAY FROM THE APPLIANCE.

WARNING:

OBSERVE CAUTION NEAR THE GLASS PANEL. THE GLASS MAY SHATTER IF STRUCK BY AN OBJECT. ALWAYS HANDLE THE GLASS PANEL WITH CARE.

Manual Operation

Familiarize yourself with the controls of the GF 305 DV IPI and be sure that anyone else using the appliance is also familiar with the controls and operation procedures. Always follow the Lighting Instructions on the inside back cover of this manual and also located on the inside the Controls Access Panel.

This appliance is equipped with an ignition device that lights the pilot automatically. Do not try to light the pilot by hand.

1. Set the Burner switch to OFF. See fig. 15.1.
2. If a wall thermostat is used, set it to the lowest temperature.
3. Connect the stove to 120VAC house current with the power cord supplied.
4. Set the Pilot Mode:
   - **CPI** for continuous pilot operation. **NOTE: The pilot light will burn continuously for up to seven (7) days, after which it will automatically extinguish. The pilot will then re-ignite at the next call for heat.**

     If the unit is left controlled by a thermostat, after seven days it will automatically change from CPI to IPI mode and the pilot will iginite only when there is a call for heat.
   - **IPI is** for intermittent pilot operation. The pilot will only ignite when there is a call for heat.
5. Once the pilot is lit, burner operation is controlled by the rocker switch located on the front panel.
   - **ON / OFF** - use for manual control of the burner.
   - **T-STAT** - use for optional wall thermostat.
6. Flame intensity can be adjusted manually by turning the Valve Regulator control knob.

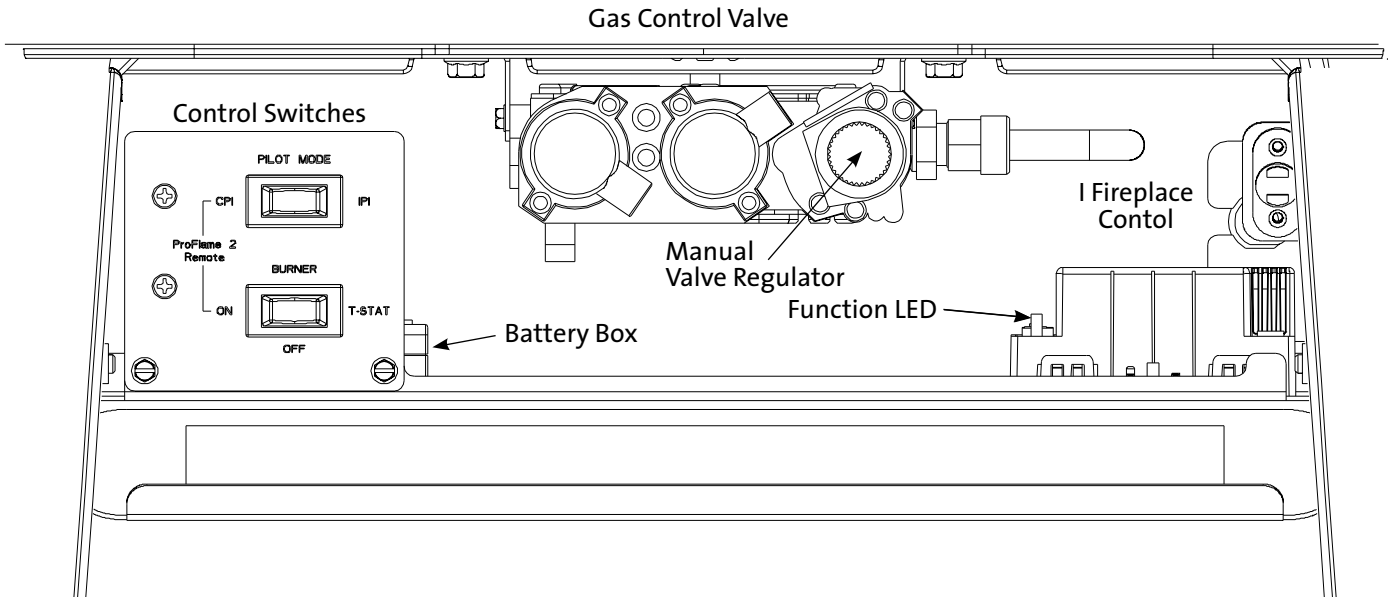

Figure 15.1. GF 305 DV IPI Controls Compartment.

Proflame 2 Remote Control Features Overview

The Proflame 2 Integrated Fireplace Control (IFC) incorporates electronic remote control of the Jøtul GF 305 DV IPI features. It is configured to control the on/off operation both manually and thermostatically, with standard and "Smart" thermostat features. It will also control flame modulation, fan power, speed, and accent lighting functions. The system utilizes an IPI system (Intermittent Pilot Ignition) which ignites the pilot only when there is a call for heat.

The control can also be switched to Continuous Pilot Ignition (CPI) to keep the pilot lit continuously for up to seven (7) days after which it will automatically extinguish if there has been no call for heat within that time. The pilot will then re-ignite at the next call for heat.

Power is provided to the IFC by 120V house current and is backed-up by a 6V battery pack (four, 1.5v AA) to allow operation during a power failure.

Remote Control Transmitter

The remote transmitter has all controls available on its face for reliable, ease of use. It gives room temperature readout, set temperature readout, all function abilities as well as childproof lockout and low battery indicator. Icons appear on the screen indicating which mode of operation you are controlling. The four button controls are easy to learn and simple to operate. The transmitter is powered by 4, 1.5V AAA batteries.

Remote Control Receiver

The receiver is integrated with the IFC board which is located within the valve compartment.

Integrated Fireplace Control (IFC)

The IFC is the electrical heart of the system. It provides power to all components and converts to 6.5v DC in the event of power failure. The IFC also sends power to the fan system and the accent light, however, when no line power is available, these features will not operate. The battery back-up only allows continued remote control of burner functions.

Sit 886 Modulating Valve

This valve has the ability to be stepped down in six increments between high and low. It can be done manually or by setting the remote control to the Smart thermostat modulation mode. Automatic modulation means that as the room temperature approaches the limit set for shut down, the valve gradually decreases or "steps-down" the fire intensity. Conversely, as room temperature cools, the valve gradually increases flame intensity. The overall result is more comfortable, even heating that minimizes temperature peaks and valleys.

Pilot Assembly

The pilot assembly consists of a pilot hood, electrode, and a flame sensor. The electrode sends a spark to the pilot hood which ignites the gas. The sensor is then engulfed by the pilot flame, flame rectification occurs and the pilot remains lit.

Intermittent Pilot Flame Rectification Process

When there is a call for heat, the pilot will automatically make four attempts to light the burner before locking out.

On the first attempt, the pilot will spark for up to sixty (60) seconds. If rectification occurs within that time, the burner will light off. If rectification does not occur, the pilot will extinguish.

If the main burner ignites and rectification is lost, the system will extinguish the burner and immediately ignite the pilot and relight the burner. The system will attempt to light the main burner three (3) more times. On the fourth attempt, the system will again light the pilot and then sit idle with only the pilot burning for sixty (60) seconds in order to establish draft to support combustion air flow.

If rectification still does not occur with the main burner lit, the system will "lock out".

A lock-out condition is cleared by cancelling the call for heat; i.e. switching the burner off, or adjusting the thermostat.

INSTALLER / OPERATOR NOTE
Under certain conditions wherein draft is unstable or weak, it is advisable to run the system in Continuous Pilot mode (CPI). Warm weather, extreme cold weather, a long vent run, or high wind conditions are all contributing factors that can interfere with IPI functionality. A continuously running pilot can generate sufficient heat to help establish and maintain the draft strength required for rectification to occur.

Pilot Shield 26240 is also available for installation to alleviate high wind interference in environments prone to those conditions. See fig. 17.4a, page 41.

ATTENTION:

- **TURN "OFF" MAIN GAS SUPPLY PRIOR TO REMOVING OR REPLACING BATTERIES.**
- **IN CASE OF REMOTE CONTROL MALFUNCTION, TURN OFF THE IFC DEVICE USING THE MAIN "ON/OFF" SWITCH.**
- **FOR INSTALLATION/MAINTENANCE SWITCH "OFF" THE IFC DEVICE BY DISCONNECTING THE MAIN POWER SUPPLY PLUG.**

Remote Control Functions

Pilot Mode

Set the stove switch to CPI mode for Proflame 2 remote control. The IPI/CPI functionality will be controlled by the remote transmitter.

Burner Control

Set the stove burner switch to ON for Proflame 2 remote control.

OFF - Turns off both remote and manual burner functionality. Switch to OFF when the stove will not be used for an extended period of time.

Remote Transmitter

The Transmitter features a simple button layout and informative display screen. See fig. 15.1.

LCD DISPLAY - graphically indicates temperature settings and status of the Thermostat, Burner, Fan, and Accent Lamp.

ON / OFF Key - controls Burner, Fan, and Lamp functions.

THERMOSTAT Key - Used to set either Manual or Thermostatic Control and index through thermostatic functions.

UP / DOWN Arrow Key - Selects thermostat temperature range, fan speed, and flame height.

MODE Key - used to select the component to be controlled: CPI/IPI, Burner, Fan, and Accent Lamp.

The Wall Mount Bracket can be used for convenient Transmitter storage.

Initializing the System

1. Press the Controls Access Door to release its magnetic catch and swing the panel down.
   Switch the Burner to OFF. See fig. 15.1, page 31.
2. Install three AAA batteries into the Transmitter handset.
3. Press the red or black button on the right front corner of the IFC board, just behind the switch plate. The board will "beep" three times and a yellow LED indicates a 10-second synchronization time limit.
4. Within the 10-second time frame, push the ON button on the Transmitter. The IFC will "beep" three or four times to indicate that it has acknowledged the transmitter command and sets to the particular code of that Transmitter.
5. **After initialization, the burner switch must be placed in the ON position and Pilot Mode switch placed in CPI.** The remote can then be used to control the burner.

To return to full Manual functionality, hold the red or black initialization button down until it "beeps" three or four times and the yellow LED illuminates. Within 10 seconds, push the button again until it signals the acknowledgement.

Remote transmitter function keys.

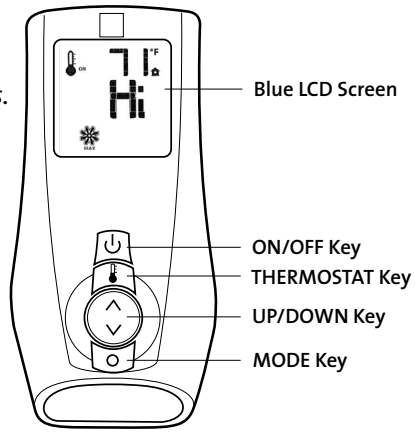

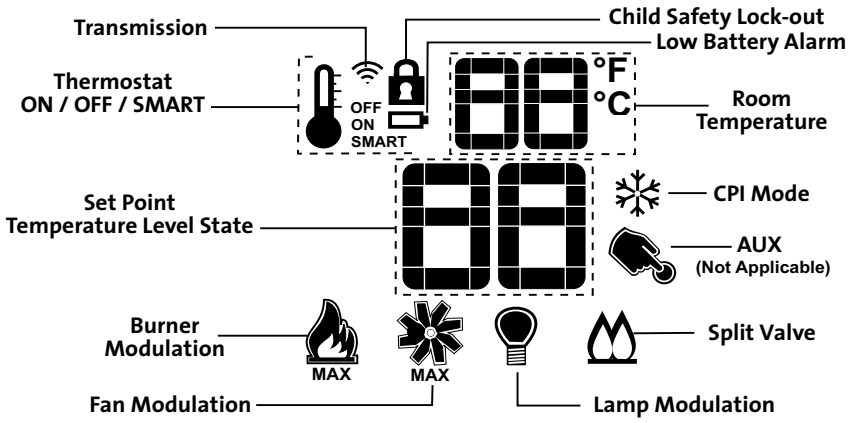

Figure 15.1. Remote transmitter display data.

Remote Transmitter Controls

Temperature Indication Display

- With the transmitter in the OFF position, press the Thermostat Key and the Mode Key at the same time. The display screen will show the current room temperature cycling between Fahrenheit and Celsius indicators each time the keys are pressed simultaneously. *Fig. 15.3.*

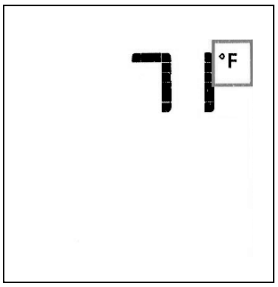

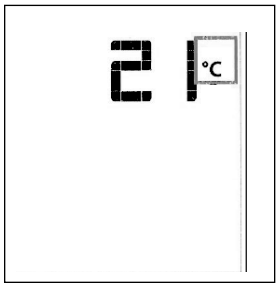

Fig. 15.3. Room temperature readings

Pilot Mode

- With the transmitter in the OFF position, press the transmitter Mode key - IPI is the default mode. Fig. 15.4.
  Press the Up arrow to index to the CPI icon and activate the Continuous Pilot Ignition mode. Fig. 15.5.. Pressing the Down Arrow Key will return to Intermittent Pilot Ignition. A single "beep" will confirm reception of the command.

  NOTE: Setting the stove Pilot Mode switch to IPI will disable remote IPI/CPI switching.

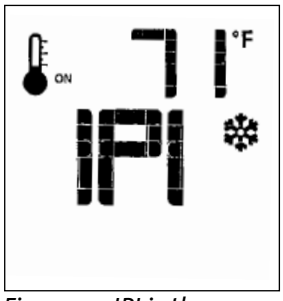

Fig. 15.4. IPI is the default position.

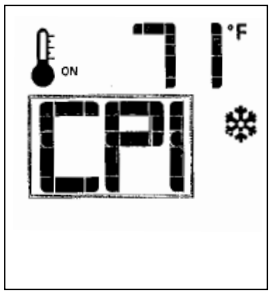

Fig. 15.5. CPI ON.

Turn on the Burner

- Press the ON/OFF Key on the Transmitter.

  The display will show all the active icons. At the same time, the Receiver will activate the Pilot Ignitor. First the pilot will ignite, followed shortly by the burner. A single" beep" from the Receiver will confirm reception of the command.

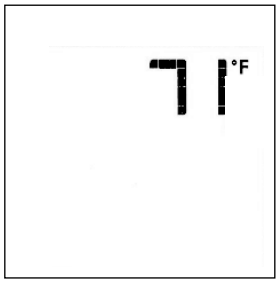

Fig. 15.6. Burner shut-down

Fig. 15.7. Burner OFF.

Turn off the Burner

- Press the ON/OFF Key. The display will show only the room temperature and icon. At the same time, the Receiver will deactivate the call for heat and the burner will shut down. Fig. 15.7. A single "beep" from the Receiver will confirm reception of the command.

Remote Burner Control

There are six flame levels available.

- With the system ON, and the burner flame level at maximum, press the Down Arrow Key once to reduce the flame height by one step. Each time the Down Key is pressed, the flame will step down until the burner is finally turned off. Fig. 15.8.
- The Up Arrow Key will increase the flame height each time it is pressed. If the Up Arrow Key is pressed while the system is on but the flame is off, the flame will come on in the High position as in figs. 15.8 - 15.10. A single "beep" will confirm reception of the command.

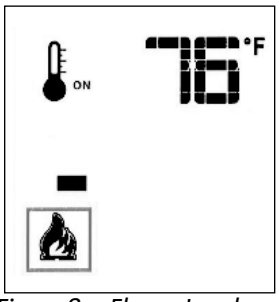

Fig. 15.8. Flame Level 1.

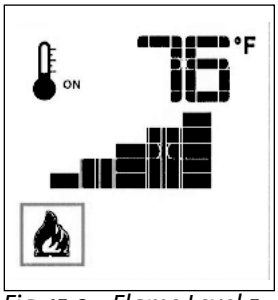

Fig. 15.9. Flame Level 5.

Fig. 15.10. Flame Level 6.

Room Thermostat (Transmitter Operation)

The Remote Control can operate as a room thermostat. The thermostat can be set to a desired temperature to control the comfort level in a room.

- To activate this function, press the Thermostat Key. The display will indicate that the room thermostat is "ON" and the current Set Temperature is now displayed. Fig. 15.11.
- To adjust the Set Temperature, press the Up or Down Arrow Keys until the desired Set Temperature is displayed. Fig. 15.12.

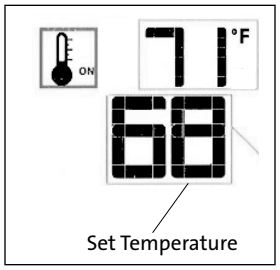

Fig. 15.11. Thermostat ON.

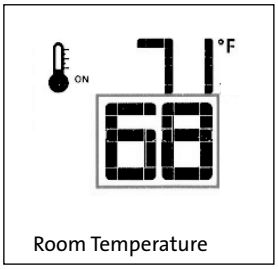

Fig. 15.12. Change Set Temperature.

SMART Thermostat Function

This function adjusts the flame intensity according to the difference in the Set Point temperature and the actual room temperature. As the room temperature gets closer to the Set Point, the Smart Function will modulate flame intensity down.

- To activate this function, press the Thermostat Key until the word "SMART" appears to the right of the thermometer bulb icon. Fig. 15.13.
- To adjust the temperature, press the Up or Down Arrow Keys until the desired Set Temperature is displayed. Fig.15.14.

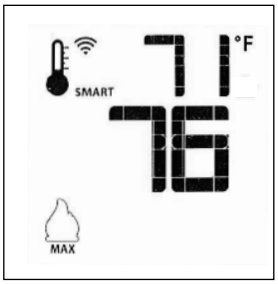

Fig. 15.13. Smart Mode

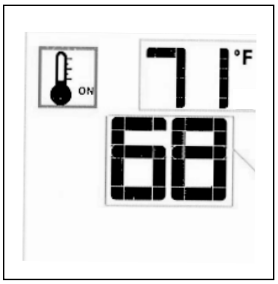

Fig. 15.14. Smart Set Temp.

Fan Control

The fan speed can be adjusted through six settings. To activate this function, press the Mode Key to index to the Fan Control icon. See fig. 15.15. The fan will not function at all if it is not first set to ON.

- Use the Up/Down Arrow Keys to turn ON, OFF, or adjust the fan speed. Fig. 15.16. A single "beep" will confirm reception of the command. After a 5 minute interval, the fan will power up to its highest speed and then modulate down to the established fan speed setting. The fan will continue to operate for 12 minutes after the burner is turned off. Manual speed control is not available when the SMART Thermostat is ON.

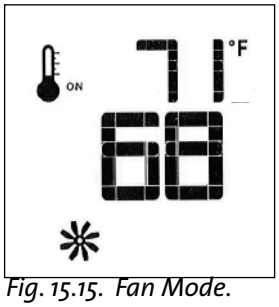

Fig. 15.15. Fan Mode.

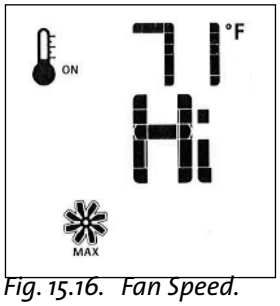

Fig. 15.16. Fan Speed.

Accent Lamp Control

- With the Remote ON, press the Mode Key to index to the Lamp icon. Figs. 15.17.
- Pressing the Up Arrow Key will turn the Lamp ON. Press the arrow keys to adjust the brightness. Fig. 15.18.
- Pressing the Down Arrow Key will turn the Lamp OFF.

Fig. 15.17. Lamp Control.

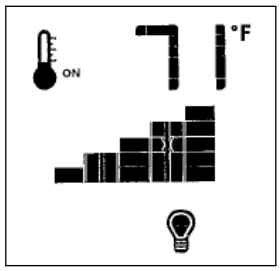

Fig. 15.18. Lamp ON.

Child Safety Lock

This function will lockout the Transmitter to prevent unsupervised operation.

- To activate the Lock, press the Mode key and UP Key at the same time. Fig. 15.19.
- To de-activate the Lock, press the Mode Key and UP Key at the same time.

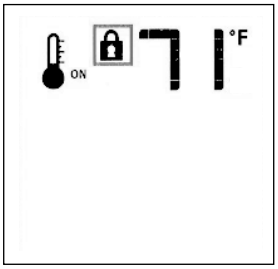

Fig. 15.19. Lock ON.

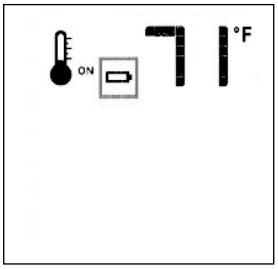

Fig. 15.20. Low Battery. *See page 37.*

16. Maintenance

NOTICE:

THIS APPLIANCE AND VENT SYSTEM MUST BE INSPECTED ANNUALLY BY A QUALIFIED GAS TECHNICIAN. Keep this manual for reference.

IMPORTANT: ALWAYS TURN OFF THE GAS SUPPLY AND DISCONNECT POWER FROM THE APPLIANCE BEFORE ANY SERVICE WORK IS PERFORMED.

Annual Cleaning

Vent System

- The entire vent system, including the chimney if appropriate, should be inspected and cleaned every year. If the intake and exhaust venting is disassembled for any reason, it should be reassembled and sealed according to the vent manufacturer's instructions provided at the initial installation.

Burner System

Periodically inspect the firebox, valve compartment, convection airways and optional blower to *BE CERTAIN THAT THE FLOW OF COMBUSTION AND VENTILATION AIR IS UNOBSTRUCTED.*

- The valve compartment should be vacuumed regularly to remove dust and debris. Vacuum more frequently if there are pets in the home.
- Use a soft brush attachment and handle log set components carefully.
- **The pilot assembly and burner base should be inspected and cleaned annually by a qualified technician. Replace any component showing evidence of corrosion.**

Safety Barrier Screen

The integrated, Invisimesh® safety screen, located in front of the door glass, should be periodically cleaned to remove dust, lint, and other air-bourne debris. Over time, and with continuous exposure to heat, these materials can contribute to screen hue variations.

Remove the door panel and clean both sides of the screen using a fine, soft bristle brush or vacuum attachment. **AVOID DAMAGING THE SCREEN. APPLY ONLY VERY GENTLE PRESSURE.**

DO NOT OPERATE THIS APPLIANCE WITH A DAMAGED OR MISSING SAFETY SCREEN. SEE PAGE 45 FOR REPLACEMENT INSTRUCTIONS.

Glass Care

Clean the glass only when necessary. Wipe the surface with a clean, dampened, soft cloth. Follow with a dry, soft towel. Take care not to scratch the glass surface.

WARNING:
DO NOT USE ABRASIVE CLEANERS ON THE GLASS.
NEVER CLEAN THE GLASS WHEN IT IS HOT.
DO NOT USE AMMONIA-BASED CLEANING SOLUTIONS .

Glass and Gasket Inspection

It is important that the glass gasket be inspected at least annually. Examine the ribbon gasket for signs of deterioration and make sure the gasket has a positive seal. Replace the gasket if necessary. Refer to the replacement parts list on page 42.

NOTE: INSPECT THE GLASS SURFACE FOR SCRATCHES AS THESE CAN WEAKEN THE PANEL TENSILE STRENGTH. REPLACE THE PANEL IF ANY SCRATCHES ARE FOUND. USE ONLY JOTUL PN 225919.

DO NOT SUBSTITUTE ANY OTHER TYPE OF GLASS.

Glass Panel or Gasket Removal

1. Remove the Front Plate. You do not need to remove the top plate to access the glass frame. **See page 5 for details. (OPEN THE FIREBOX - With Vent Connected)**
2. Use the Latch Tool to pull each latch hook forward to disengage them from the glass frame. See fig. 16.1.
3. Lift the glass frame all the way up and out of the top of the stove. Lay this assembly on a flat surface, protecting the frame from scratches using a blanket or towel.
4. The glass panel is held in place by four tabs on the frame. Use a screwdriver or small pliers to pry these up just enough to release the glass panel.
5. Remove the old gasket material.

Glass Panel or Gasket Replacement

1. Wrap the new gasket material evenly around the edge of the glass, peeling back the protective strip to expose the adhesive as you go. See fig. 16.2. Press the adhesive side down onto the glass surface. Do not stretch the gasket.
2. Place the gasketed glass within the frame and carefully bend each of the retainer tabs back just enough to secure the glass in the frame. See fig. 16.3. The replacement glass kit 157912 includes 4 compression clips for use in case a tab should break. The clips slip over the edge of the frame sides.

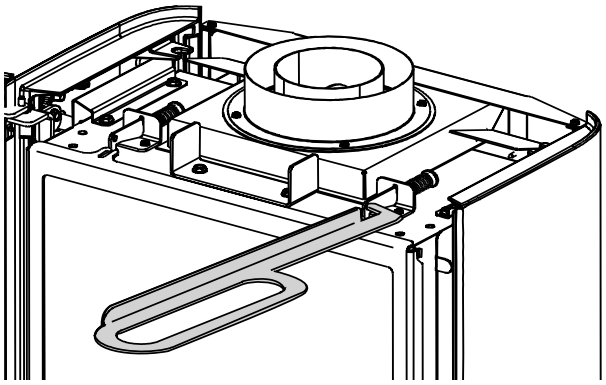

Figure 16.1. Use the Latch Tool to disengage both latches on the glass frame.

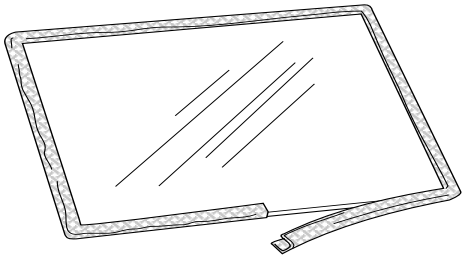

Figure 16.2. Wrap the gasket around the glass panel.

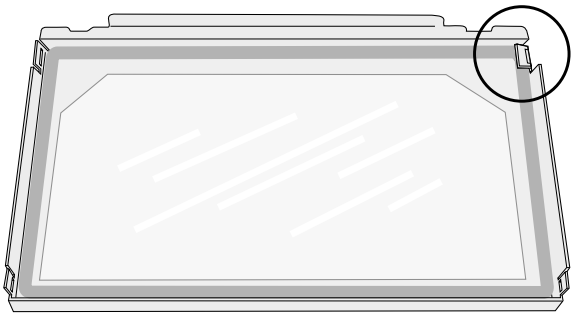

Figure 16.3. Bend retainer tabs only enough to remove the glass panel.

Remote Transmitter Battery Replacement

The life-span of transmitter batteries depends upon battery quality, the frequency of set point changes, freqency of ignition call changes, etc.

When battery power is low, a Battery icon will appear on the transmitter display before all power is lost. See fig. 15.20, page 35. The icon will disappear with installation of three, 1.5 AAA fresh batteries.

NOTE: Avoid inadvertently pressing the thermostat function key when replacing the batteries. Doing so will turn off thermostatic functions. To restore that function, re-install the batteries while again pressing the thermostat key.

IFC Battery Replacement

A red LED on the IFC board indicates low battery power.

1. Switch Burner to OFF and disconnect power to the stove.
2. The battery box is located behind the switch plate in the controls compartment. See fig. 15.1. If a blower has been installed, temporarily remove the switch plate to access the box. Otherwise, the box is easily accessible from behind the stove. Disengage the Velcro® pad and depress the box cover to open.
3. Install four, 1.5v AA batteries and return box to the compartment.
4. Reconnect power to the stove.

17. Appendix

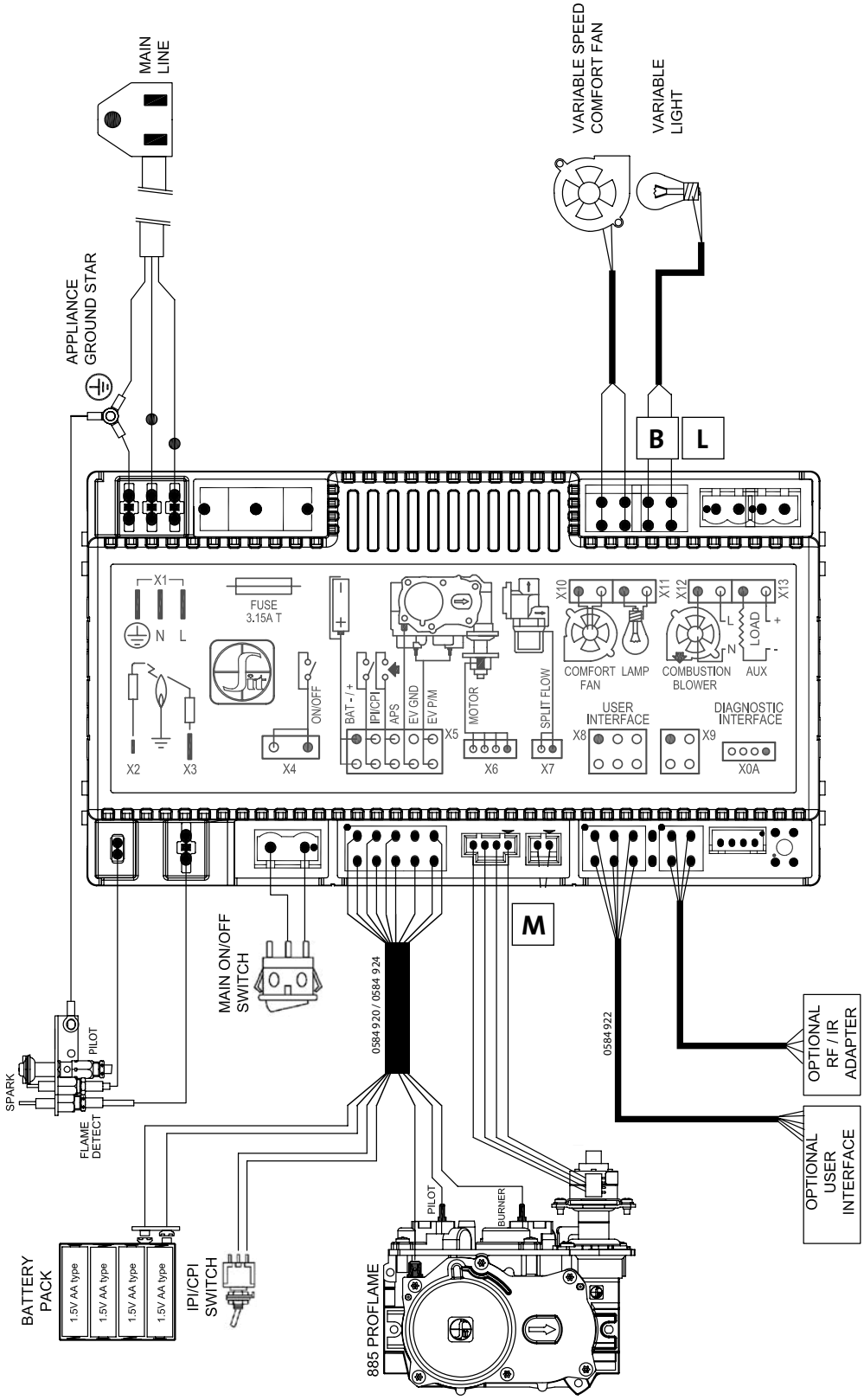

Figure 17.1 GF 305 DV IPI Proflame 2 Wiring Schematic including Premium Upgrade components

GF 305 DV IPI Illustrated Parts Breakdown

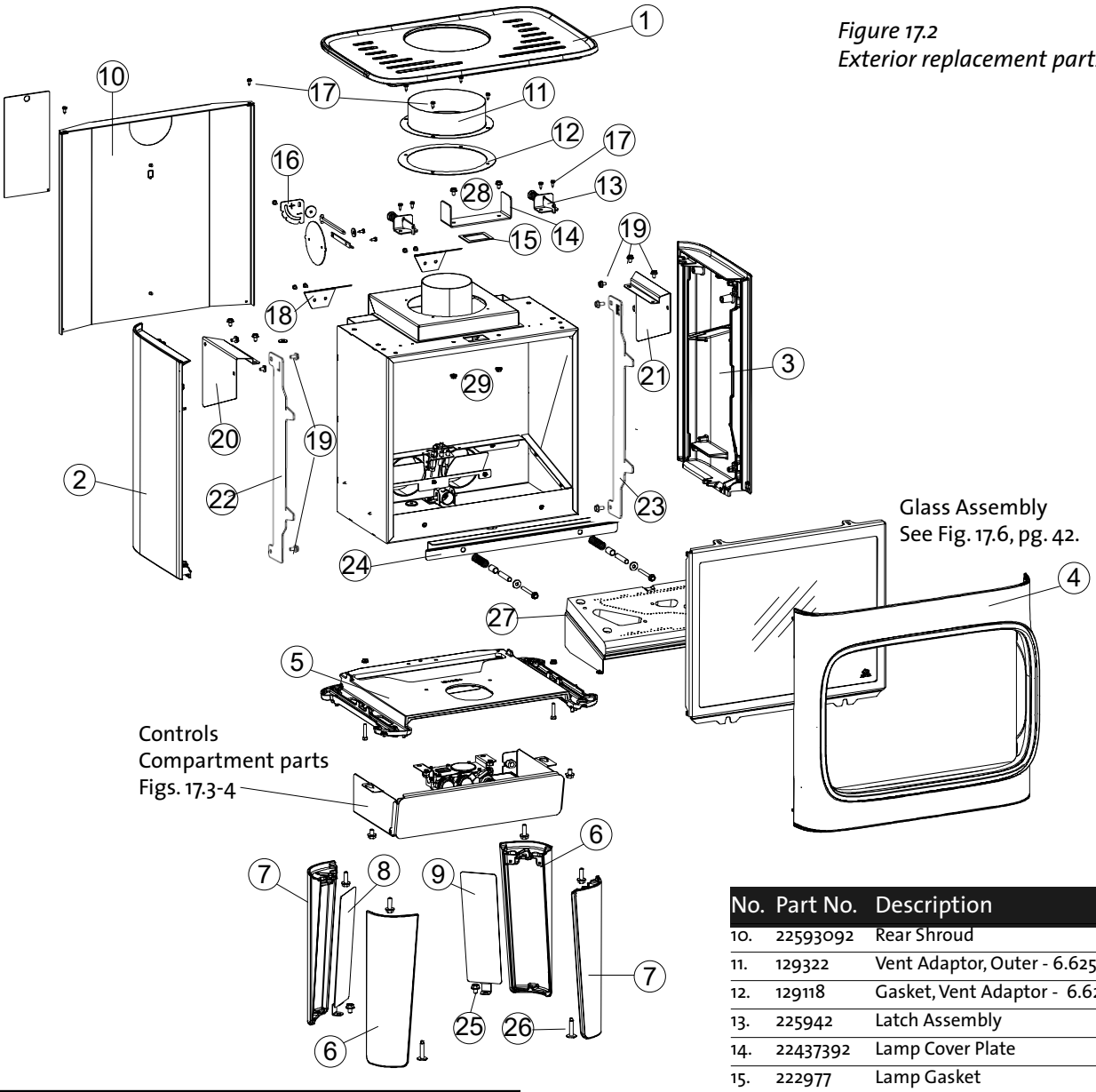

Figure 17.2
Exterior replacement parts.

	Cast Iron Parts	Matte Black Paint	White Enamel
1.	Top Plate	10469592	104694553
2.	Side Plate, Left,	10469992	158039
3.	Side Plate, Right	10500092	158040
4.	Front Door Plate Asy.	10469692	158041
5.	Base Plate*	158068	158068
6.	Leg, Lt Front / Rt. Rear	10500192	10500153
7.	Leg, Rt Front / Lt. Rear	10500292	10500253
8.	Utility Cover Plate, Lt.	22623992	226239WHP (steel)
9.	Utility Cover Plate, Rt.	22592592	225925WHP (steel)

** Base Plate is unpainted*

No.	Part No.	Description
10.	22593092	Rear Shroud
11.	129322	Vent Adaptor, Outer - 6.625" dia.
12.	129118	Gasket, Vent Adaptor - 6.625" dia.
13.	225942	Latch Assembly
14.	22437392	Lamp Cover Plate
15.	222977	Lamp Gasket
16.	22608292	Restrictor Guage
17.	117917	#8 x 1/2" SM screw
18.	226237	Rear Air Deflector
19.	9962	Bolt, M6 x 10 mm
20.	225926	Side Plate Retainer, Left
21.	226071	Side Plate Retainer, Right
22.	22686492	Front Plate Support Bracket, Left
23.	22686392	Front Plate Support Bracket, Right
24.	22606292	Glass Frame Retainer
25.	99115	Bolt, Cover Plate, M8 x 12 mm
26.	118047	Leg Leveler
27.	157959	Replacement Burner Assembly
28.	99625	Bolt, M6 x 16 Serr. Flange Hd, blk
29.	117968	Nut, M6 Serr. Flange, plain
30.	226865	Front Plate, Inner Mount Bracket (2)

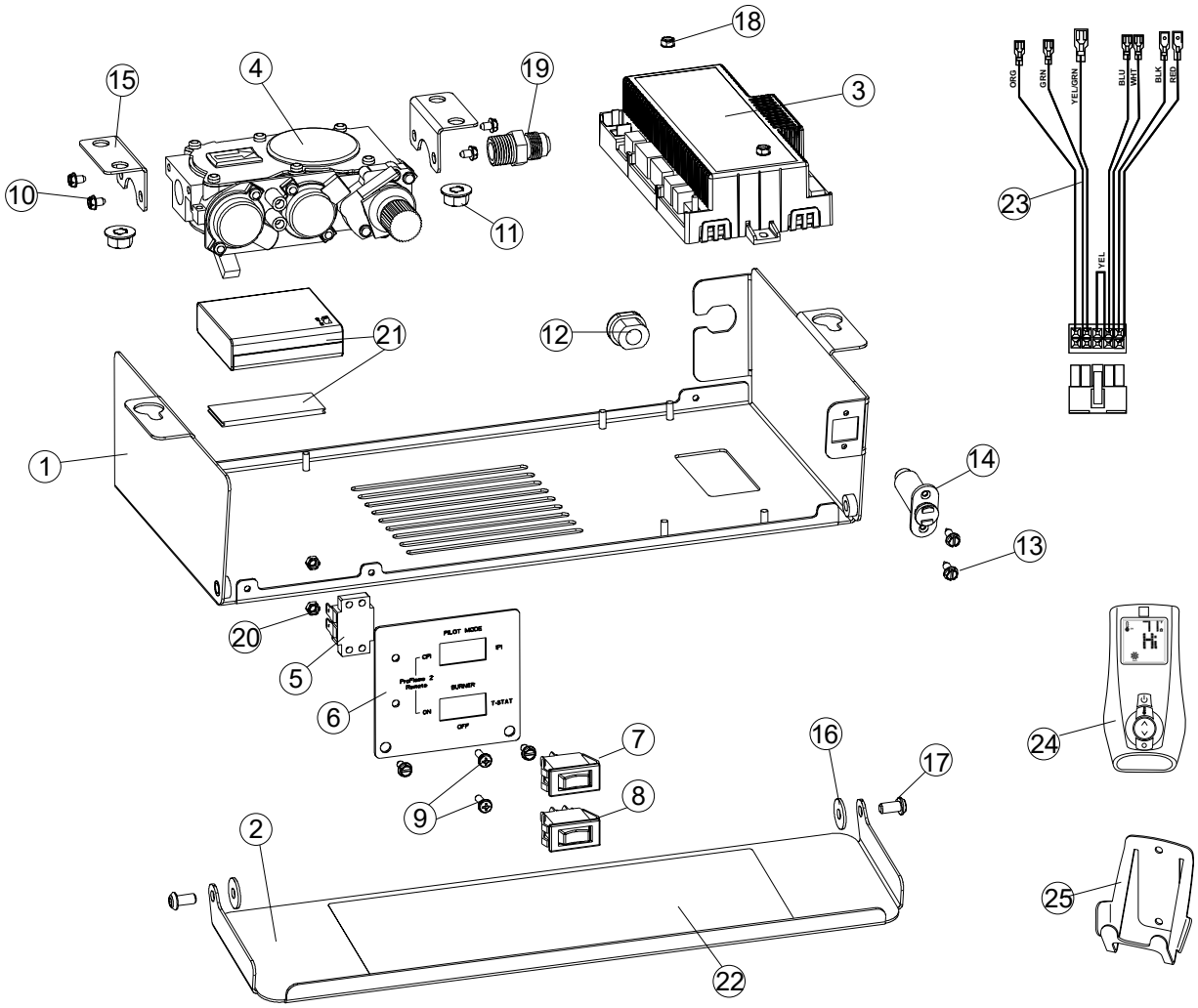

Figure 17.3
GF 305 DV IPI Valve Assembly and IFC Components.

No.	Part No.	Description
1.	22593292	Control Compartment
2.	22693392	Control Compartment Door
3.	157495	Proflame 2 IFC Control Board (POD)
4.	223980	Valve, NG - SIT Proflame, 0.886.002, 30% TD
5.	129154	Terminal Block Bracket, 2 pole, 77 Series
6.	224781	Control Switch Plate, IPI
7.	120517	Switch, Rocker, SPST, Black Plain
8.	220703	Switch, Center OFF, Black Plain
9.	117921	Screw, Pan Hd, M4 x 12 mm
10.	118214	Screw, #8 x 1/4", Taptite
11.	117881	Nut, M6 Serr Flange
12.	117951	Wire Strain Relief
13.	117917	#8 x 1/2" Sheet metal screws, 4
14.	224145	Magnetic Catch
15.	225934	Valve Bracket
16.	117588	Washer, Hinge - M6 x 12

No.	Part No.	Description
17.	117130	Hinge Bolt, Hex Hd Serr Flange, M6 x 12 mm
18.	118055	Kepnut, M4, Ext. Tooth, Lockwasher
19.	223215	Flex Line Adaptor, Brass, 3/8 NTP x 3/8" dia.
20.	117922	Nut, Hex - M4
21.	157265	Replacement IPI Battery Box (4, AA) w/ pads
22.	224952	Instruction Label, Controls Door
23.	158254	Replacement Burner IPI Wire Harness
24.	157495	Replacement Multifunction Remote / Black
25	223951BKP	Replacement Remote Wall Bracket / Black PC
26.*	157494	Replacement Burner Control Wire Harness
27. *	157492	Replacement Power Cord Ass'y. IPI*
28.*	226310	Flex Gas Supply line, 3/8" O.D. x 36"
	** not illustrated*	

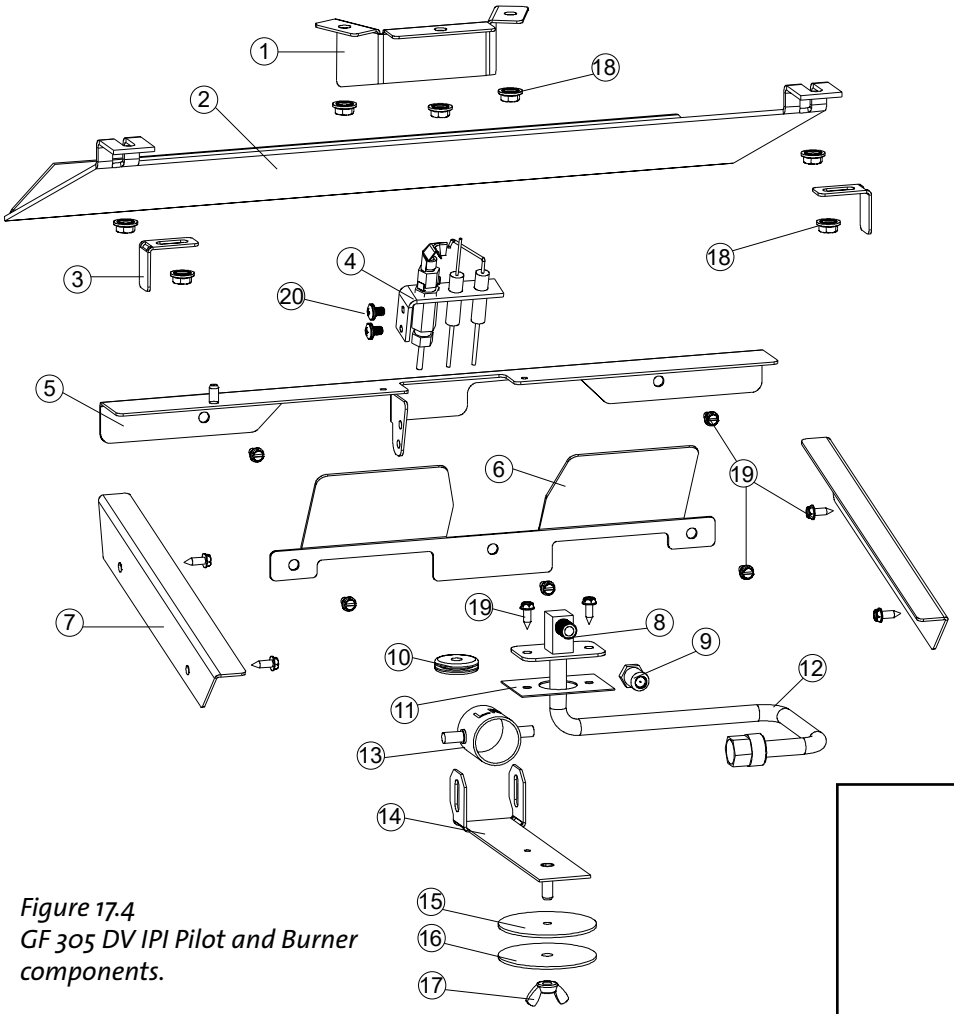

Figure 17.4
GF 305 DV IPI Pilot and Burner components.

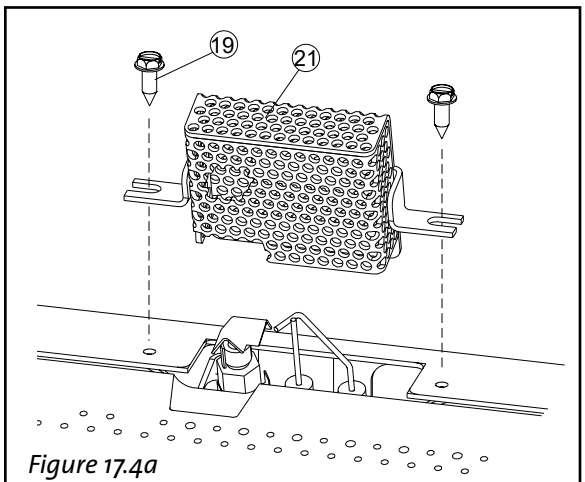

Figure 17.4a
*GF 305 DV IPI High Wind Pilot Shield **

No.	Part No.	Description
1.	226061	Exhaust Deflector, *NG use only - remove for LP*
2.	22545692	Lower Exhaust Baffle
3.	22610092	Side Panel Retainer, 2
4.	158222	Pilot Assembly, SS body, IPI
4a.*	226758	Pilot Injector, NG - SS, BL 20 factory-equipped
4b.*	226759	Pilot Injector, LP - SS, 0013
5.	22592892	Rear Burner Skirt
6.	226055	Primary Air Baffle
7.	22608492	Side Panel Support Shelf
8.	223231	Orifice Holder, Drop-in Assembly
9.	129130	Injector, NG - #38
	220048	Injector, LP - 1.55 mm
10.	225525	Silicone - Pilot Plug

** not illustrated*

No.	Part No.	Description
11.	222280	Gasket, Drop-in Orifice Holder
12.	223231	Fuel Line Assembly
13.	221390	Air Shutter
14.	225927	Air Shutter Handle
15.	220734	Air Shutter Gasket
16.	118023	Air Shutter Washer
17.	117975	Wing Nut
18.	117968	Nut. M6 Hex
19	117917	Screw 8 x 12 1/2 SL Blk Oxide
20.	118279	Screw, Button Hd
21.	*226240	High Wind Pilot Shield - *special order*

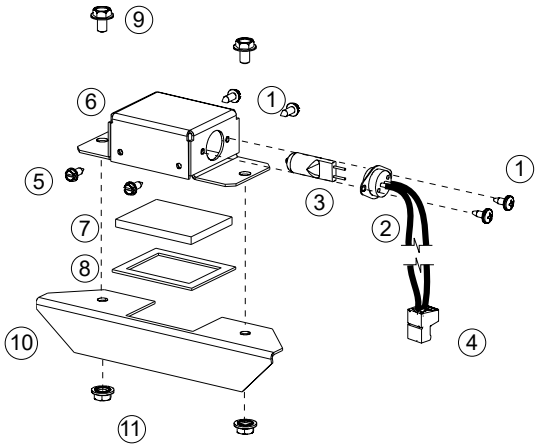

Figure 17.5
GF 305 DV IPI Accent Lamp Assembly

No.	Part No.	Description
1.	117967	Screw, Pan Head #7 x 3/8 PH Zinc
2.	157601	Replacement Lamp Wire Harness
3.	222943	Light Bulb, 130 Volt, 30 Watt
4.	224796	Connector, 2 pin, IPI Accessories
5.	117917	Screw, 8 x 1/2 SL Blk Oxide
6.	22476392	Light Box, Delay Door Mount
7.	222974	Glass, Ceramic, Light Fixture
8.	222977	Gasket, Light Cover
9.	99625	Bolt, Hex Head Serr. Flange M6 x 16 8.8 Blk
10.	22476792	Lamp Shade
11.	117968	Nut, M6 Serrated Flange, Plain

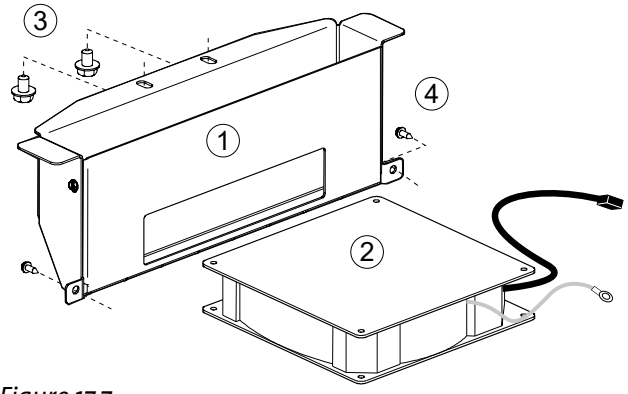

Figure 17.7
GF 305 DV IPI Blower Components

No.	Part No.	Description
1.	22545492	Blower Shroud
2.	158036	Replacement Blower
3.	99625	Bolt, Hex Head Serr. Flange M8 x 15 mm, Blk
4.	117917	#8 x 1/2" SM screw

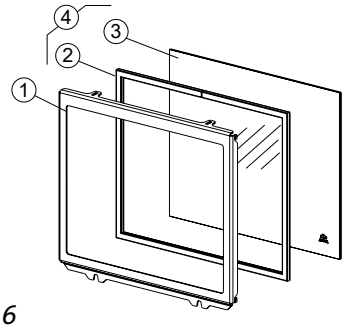

Figure 17.6
GF 305 DV IPI Glass Assembly

No.	Part No.	Description
1.	22545492	Glass Frame
2.	129124	Gasket, Tadpole - .25 dia. x 1.25", 6 ft.
3.	225476	Glass Panel, Ceramic
4.	157960	Replacement Glass Kit, GF 305 DV IPI
	Kit includes 220042 Replacement Glass Clips, 4	

Door Assembly, Interior

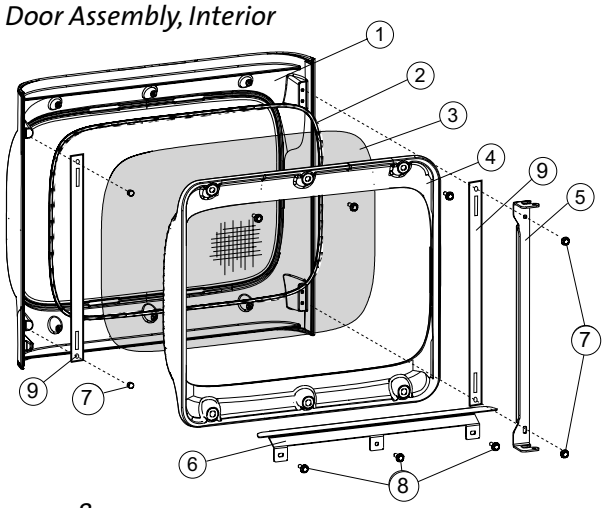

Figure 17.8
GF 305 DV IPI Safety Screen Inner Plate Assembly

No.	Part No.	Description
1.	127215	Front Door Plate, Outer
2.	127215	Screen Gasket, 6 ft. 125 x 8 mm
3.	226072	InvisiMesh Safety Screen
4.	10469792	Screen Retainer
5.	225981	Door Hinge; *Only Models < SN 54002549*
6.	22606292	Glass Frame Retainer
7.	117130	Bolt, M6 x 12 Serr. Flange Hd, blk
8.	117117	Bolt, M6 x 20 Serr. Flange Hd, blk (6)
9.	22686592	Inner Hanger Bracket (2), Front Door Plate
		Models > SN 54002549

Utility Cover Plate Installation

This appliance incorporates Utility Cover Plates to help obscure the fuel line and power cord. These may be removed to adjust the line routing to accommodate individual installation requirements. Each plate is specific to the left or right leg and carries an identification symbol to aid orientation.

Use a 13 mm open end wrench to attach the plates to the legs using the M8 x 20 mm hex bolt supplied.

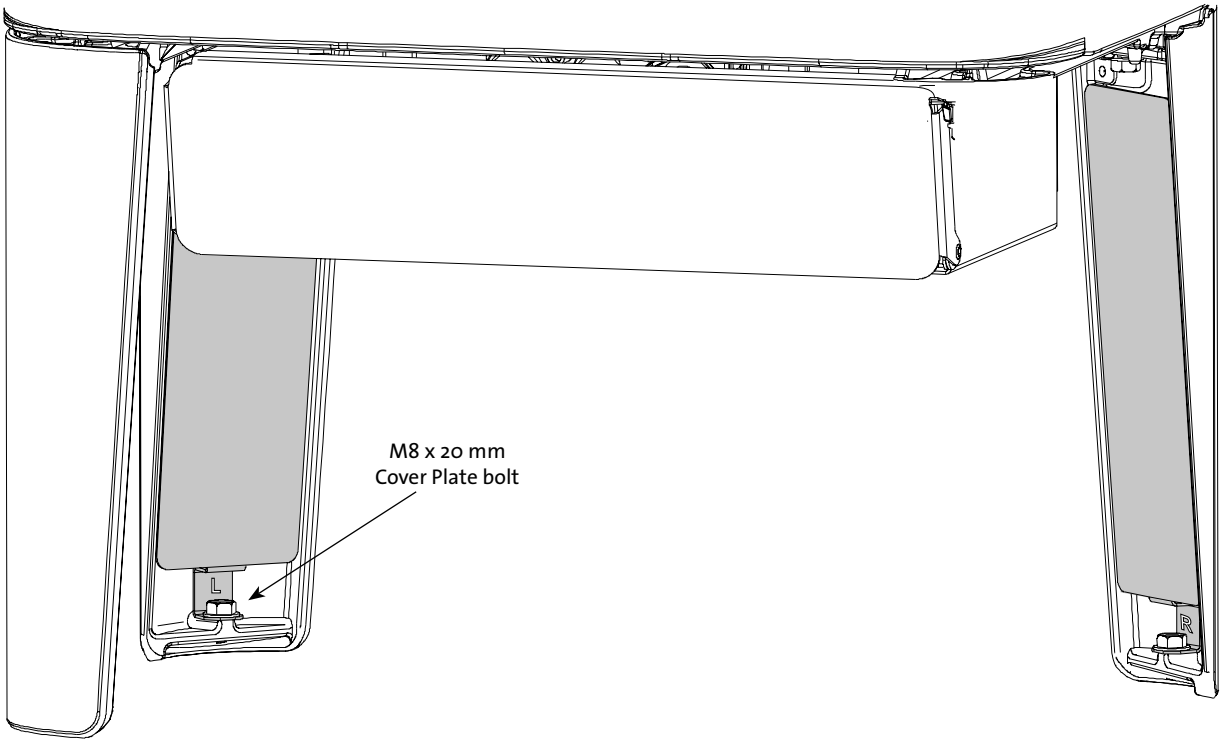

Figure 17.9
LEFT and RIGHT Utility Cover Plate identification.

Replacement Fluted Panel Parts		
1	226210	Fluted Rear Panel
3.	226211	Fluted Side Panel, Left
3.	226212	Fluted Side Panel, Right
4.	226100	Panel Retainer Bracket

Replacement Black Reflective Glass Panel Parts		
1	226087	Reflective Rear Panel
2.	226088	Reflective Side Panel, Left
3.	226089	Reflective Panel, Right
4.	226100	Panel Retainer Bracket

Replacement Log Set Parts / See pgs. 24 -27

Mobile Home Installation

The GF 305 DV IPI can be installed for use in a mobile home in the U.S. and Canada with the following requirements:

- The stove must be secured to the floor of the mobile home. Use Jøtul Floor Bracket Kit #158038.
- Provision must be made to secure an electrical ground between the stove and the mobile home chassis. The ground may be connected to either of the included leg levelers.
- The stove is installed in accordance with Title 24 CFR, Part 3280-Manufactured Home Construction and Safety Standard in the U.S. In Canada, comply with CSA Z240.4, Gas Equipped Recreational Vehicles and Mobile Housing.
- Always contact your local officials about installation restrictions and requirements in your area.

THIS APPLIANCE MAY BE INSTALLED AS AN OEM INSTALLATION IN A MANUFACTURED (MOBILE) HOME AND MUST BE INSTALLED IN ACCORDANCE WITH THE MANUFACTURER'S INSTRUCTIONS AND THE MANUFACTURED HOME CONSTRUCTION AND SAFETY STANDARD, TITLE 24 CFR, PART 3280. THIS APPLIANCE IS ONLY FOR USE WITH THE TYPE OF GAS THAT IS INDICATED ON THE STOVE'S RATING PLATE. A GAS CONVERSION KIT IS PROVIDED WITH THE GF 305 DV IPI GAS STOVE.

THIS APPLIANCE MAY BE INSTALLED IN AN AFTERMARKET PERMANENTLY LOCATED, MANUFACTURED (MOBILE) HOME, WHERE NOT PROHIBITED BY LOCAL CODES.

Kit Contents:
- Leg Brackets
- M8 Hex Nut

Tools & Materials:
- Power Drill
- 13 mm socket or open end wrench
- Lag Screw or similar floor fastener
- Grounding wire and clamp

Procedure

1. Run a ground wire from the mobile home grounding to the stove leg location in compliance with local electrical code. At the stove leg, the ground may be secured to either a Utility Cover Plate bolt, a Leg Leveler nut or the Leg Bracket floor fastener using an appropriate connector.
2. You can attach the Leg Bracket to a Utility Cover Plate with the M8 x bolt provided with the stove as shown in fig. 17.7 on the preceding page. You will need an open end wrench.

   Alternatively, it can be installed on a Leg Leveler bolt as shown here using the M8 hex nut provided with the bracket.
3. Drill a pilot hole for the floor bolt and secure the bracket to the floor using fastener hardware appropriate for the floor material.

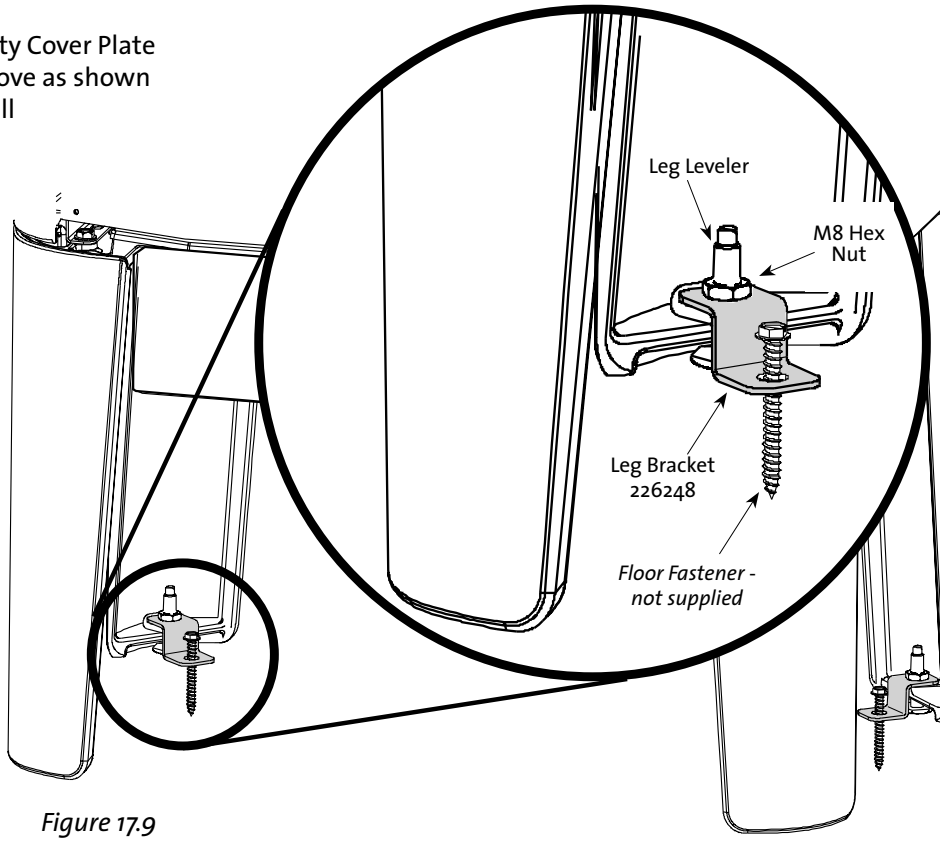

Figure 17.9
Floor Bracket installation.

Safety Screen Replacement

DO NOT OPERATE THIS APPLIANCE WITH A DAMAGED OR MISSING SAFETY SCREEN. SERIOUS BURNS MAY RESULT FROM INADVERTENT CONTACT WITH THE GLASS PANEL EVEN WHEN THE APPLIANCE IS NOT OPERATING. REPLACE SCREEN WITH KIT NO. 157992.

Replacement Kit Contents

1. Safety Screen
2. Gasket, 1/8”x 5/16”, self-adhesive

Tools Required

- 10 mm wrench or socket
- Utility knife
- Safety glasses
- Work gloves

Installation

1. Disconnect power from the appliance.
2. Remove the door from the stove by lifting to disengage the hinge bar from the hinge pins.
3. Place the door face down on a towel or carpet. Gradually remove the six, M6 x 25 mm screen frame bolts in a cross-alternating pattern.

   Remove the damaged screen and original gasket.
4. Loosely apply the self-adhesive gasket material into the door channel. Do not stretch the gasket. Trim any excess material.
5. Position the new screen over the door opening, overlapping the gasket.
4. Replace the cast iron screen frame. Install the frame bolts and gradually tighten them in a cross-alternating pattern.

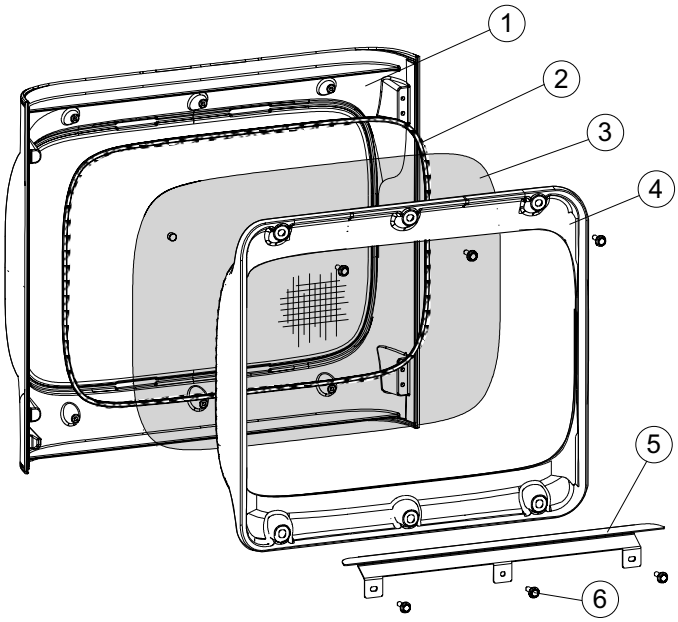

Figure 17.10
Safety Screen Replacement

1. Door
2. Gasket
3. Safety Screen
4. Screen Frame
5. Door Shade
6. M6 x 25mm hex bolts, 6

This page is intentionally blank.

18. Jøtul Gas Product Warranty

This warranty policy applies to gas products identified by Jøtul, Scan, and Atra trade names, as set forth below.

A. LIMITED FIVE YEAR WARRANTY - Cast Iron, Steel Doors, Surround Components, Firebox:

Jøtul North America Inc. (JØTUL) warrants, to the original retail purchaser, that those components of the Jøtul, Scan, or Atra Gas Stove or Fireplace specified above will be free of defects in material and workmanship for a period of five (5) years from the date of purchase. This warranty is subject to the terms, exclusions and limitations set forth in the following text.

B. LIMITED TWO YEAR WARRANTY - Burner, Ceramic Burner, BurnerTreatments, Firebox Panels:

JØTUL warrants, to the original retail purchaser, that those components of the Jøtul, Scan, or Atra Gas Stove or Fireplace specified above will be free of defects in material and workmanship for a period of two (2) years from the date of purchase. **Ceramic burners** are warranted against functional defects for a period of two (2) years from the date of purchase. This warranty is subject to the terms, exclusions, and limitations set forth in the following text.

C. LIMITED TWO YEAR WARRANTY - Enamel Finish:

JØTUL warrants, to the original retail purchaser, the enamel finish on cast iron components of the Jøtul Stove or Fireplace Insert specified above against peeling or fading for a period of two (2) years from the date of purchase. This warranty is subject to the terms, exclusions and limitations set forth below.

D. LIMITED ONE YEAR WARRANTY - Gas & Electrical Components (controls, plumbing, valve, blower):

JØTUL warrants, to the original retail purchaser, that those components of the Jøtul, Scan, or Atra Gas Stove or Fireplace specified above will be free of defects in material and workmanship for a period of one (1) year from the date of purchase. This warranty is subject to the terms, exclusions, and limitations set forth in the following text.

JØTUL will repair or replace (including parts & labor), at its option, any of the above components determined by JØTUL to be covered by this warranty. You must, at your own expense, arrange to deliver or ship the component to an authorized Jøtul, Scan, or Atra dealer and arrange for pickup or delivery of the component after repairs have been made. If, upon inspection, JØTUL determines that the component is covered by this warranty, the repair or replacement will be made as set forth above. This warranty is not transferable and is extended only to, and is solely for the benefit of, the original retail purchaser of the Jøtul, Scan, or Atra Gas Stove or Fireplace. This paragraph sets forth the sole remedy available under this warranty in the event of any defect in the Jøtul, Scan, or Atra Gas Stove or Fireplace.

The warranty period for any replaced component will be the remaining unexpired portion of the warranty period for the original component. Please retain your dated sales receipt in your records as proof of purchase.

EXCLUSIONS AND LIMITATIONS

NOTICE: This warranty is void if installation or service is performed by someone other than an authorized installer, service agency or gas supplier, or if installation is not in conformance with the installation and operating instructions contained in this owner's manual or local and/or national fire and building regulations. A listing of local authorized installers, service agencies and gas suppliers can be obtained from the National Fireplace Institute at http://www.nficertified.org/.

This warranty does not cover the following:

1) Repair or replacement of parts that are subject to normal wear and tear during the warranty period or to parts that may require replacement in connection with normal maintenance. These parts include paint, lamp bulbs, gaskets and glass (except to the extent such parts suffer damage from thermal stress).
2) Damage due to incorrect installations not in conformance with the installation instructions contained in this owner's manual or local and/or national fire and building regulations.
3) Damage due to service performed by an installer, service agency or gas supplier, unless otherwise agreed to in writing by JØTUL.
4) Labor or other costs associated with the repair of gas controls, plumbing, burners, log set, or sheet metal firebox beyond the warranty period.
5) Damage caused by unauthorized modification, use or repair.
6) Damage to enameled surfaces caused by improper operation or misuse, including use that is not in conformance with the operating instructions contained in this owner's manual. Such damage can typically be identified by bubbling, cracking, or discoloration of the enamel finish.
7) Costs incurred by travel time and/or loss of service.
8) Damage incurred while the Jøtul, Scan, or Atra Gas Stove or Fireplace is in transit.

IN NO EVENT SHALL JØTUL, ITS PARENT COMPANY, SHAREHOLDERS, AFFILIATES, OFFICERS, EMPLOYEES, AGENTS OR REPRESENTATIVES BE LIABLE OR RESPONSIBLE TO YOU FOR ANY SPECIAL, INDIRECT, INCIDENTAL, CONSEQUENTIAL, PUNITIVE OR OTHER SIMILAR DAMAGES, INCLUDING, BUT NOT LIMITED TO, LOST PROFITS, LOST SALES, INJURY TO PERSON OR PROPERTY, OR DAMAGES TO A STRUCTURE OR ITS CONTENTS, ARISING UNDER ANY THEORY OF LAW WHATSOEVER. ALL IMPLIED WARRANTIES, INCLUDING THE IMPLIED WARRANTIES OF MERCHANTABILITY AND FITNESS FOR A PARTICULAR PURPOSE, OR OTHERWISE, ARE LIMITED IN DURATION TO THE LENGTH OF THIS WRITTEN WARRANTY. EXCEPT AS EXPRESSLY SET FORTH HEREIN, JØTUL MAKES NO ORAL, WRITTEN OR OTHER WARRANTY WITH RESPECT TO JØTUL, SCAN OR ATRA GAS STOVES OR FIREPLACES.

Some states do not allow the exclusion or limitation of incidental or consequential damages, or limitations on the length of implied warranties. Therefore, the above exclusions or limitations may not apply to you. This warranty gives you specific legal rights, and you may have other rights, which vary from state to state.

JØTUL reserves the right to discontinue, modify or change the materials used to produce the Jøtul, Scan, or Atra Gas Stove or Fireplace. JØTUL shall have the right to replace any defective component with substitute components determined by JØTUL to be of substantially equal quality and price.

The dollar value of JØTUL's liability for breach of this warranty shall be limited exclusively to the cost of furnishing a replacement component. JØTUL shall not in any event be liable for the cost of labor expended by others in connection with any defective component. Any costs or expenses beyond those expressly assumed by JØTUL under the terms of this warranty shall be the sole responsibility of the owner(s) of the Jøtul, Scan, or Atra Gas Stove or Fireplace.

No dealer, distributor, or other person is authorized to modify, augment, or extend this limited warranty on behalf of JØTUL. NO MODIFICATION OR CHANGE TO THIS WARRANTY WILL BE EFFECTIVE UNLESS IT IS MADE IN A WRITTEN DOCUMENT MANUALLY SIGNED BY AN AUTHORIZED OFFICER OF JØTUL.

An authorized installer may have been provided with certain information related particularly to the Jøtul, Scan, or Atra Gas Stove or Fireplace; however, no authorized installer or other person who may service the appliance is an agent of JØTUL. No inference should be made that JØTUL has tested, certified, or otherwise pronounced any person as qualified to install or service the appliance. JØTUL shall not be liable or otherwise responsible for any error or omission by a person installing or servicing a Jøtul, Scan, or Atra Gas Stove or Fireplace.

If you believe your Jøtul, Scan, or Atra Gas Stove or Fireplace is defective, you should contact your nearest authorized Jøtul, Scan, or Atra dealer, who will process a warranty claim. IN ORDER TO QUALIFY FOR WARRANTY COVERAGE, JØTUL MUST RECEIVE NOTICE OF A POSSIBLE DEFECT WITHIN SIXTY (60) DAYS OF THE DATE THE DEFECT IS FIRST DISCOVERED, OR REASONABLY COULD HAVE BEEN DISCOVERED.

This warranty is given by Jøtul North America, Inc.,
55 Hutcherson Drive, Gorham, Maine 04038 USA

LIGHTING INSTRUCTIONS

FOR YOUR SAFETY, READ BEFORE LIGHTING.

WARNING:

IF YOU DO NOT FOLLOW THESE INSTRUCTIONS EXACTLY, A FIRE OR EXPLOSION MAY RESULT CAUSING PROPERTY DAMAGE, PERSONAL INJURY, OR LOSS OF LIFE.

A. This appliance is equipped with an ignition device which automatically lights the pilot. **Do Not** try to light the pilot by hand.

B. BEFORE LIGHTING, smell all around the appliance area for gas.
Be sure to smell next to the floor because some gas is heavier than air and will settle to the floor.

WHAT TO DO IF YOU SMELL GAS:

- Extinguish any open flame
- Open windows.
- Do not light this or any other appliance.
- Do not touch any electrical switches.
- Do not use any phone in your building.
- Immediately call your gas supplier from a neighbor's phone.
- If your gas supplier cannot be reached, call the fire department.

C. Use only your hand to turn the gas control knob. Never use tools. If the knob will not turn by hand, do not try to force it or repair it.
Call a qualified technician. Force or attempted repair may result in a fire or explosion.

D. Do not use this appliance if any part has been under water. Immediately call a qualified service technician to inspect the appliance and to replace any part of the control system and any gas control which has been under water.

OPERATING INSTRUCTIONS

1. STOP! Read the safety information above.

2. Set the thermostat, if equipped, to the lowest setting.

3. Set the Burner switch to the "OFF" position.

4. This appliance is equipped with an ignition device which automatically lights the pilot. Do not try to light the pilot by hand.

5. Wait five (5) minutes to clear out any gas. Then smell for gas, including near the floor.

If you smell gas, STOP! Follow "B" in the safety information above on this label. If you do not smell gas, go to the next step.

6. Set the Pilot Mode switch to CPI for continuous pilot operation. The pilot will light and remain lit for up to seven (7) days.

OR

Set Pilot to IPI for thermostatic operation. The pilot will light only when there is a call for heat.

7. Set the Burner switch to "ON".
CPI Mode: The burner will ignite immediately.
IPI Mode: The burner will ignite when there is a call for heat.

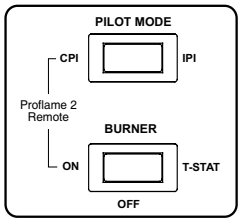

Pilot Mode

Burner Mode

CONTROL SWITCHES

PILOT ASSEMBLY

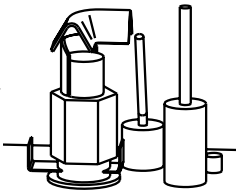

8. Set the thermostat to the desired setting to light the burner. If the appliance will not operate, follllow the instructions below "To Turn Off Gas To The Appliance" and call your service technician or gas supplier.

TO TURN OFF GAS TO THE APPLIANCE

1. Set the thermostat to the lowest setting.

2. Turn off all electric power to the appliance if service is to be performed.

3. Set the Burner switch to the "OFF" position.

4. Close control access door.

July 2021
139843_L

This appliance must be installed in conformance with local and national building regulations. Before beginning the installation, it is important that these instructions be carefully read and understood. Jøtul maintains a policy of continual product development. Consequently, products may differ in specification, color or type of accessories from those illustrated or described in various publications.

Your stove has a unique serial number stamped on the rating plate which is hung on the back. Please record the serial number in the space below. You may also wish to attach your purchase receipt to this page for future reference.

MODEL NAME: Jøtul GF 305 DV IPI

SERIAL NUMBER:_____

DATE OF PURCHASE:_____

AUTHORIZED DEALER:_____

ADDRESS _____

PHONE: _____

INSTALLER: _____

FUEL TYPE: _____

FUEL CONVERSION: NO _____ YES_____

INTALLATION DATE: _____

INSTALLATION TECHNICIAN: _____

Jøtul North America
55 Hutcherson Dr.
Gorham, Maine 04038-2634

Jøtul ASA
P.O. Box 1411
N-1602 Fredrikstad
Norway