Jøtul GF 370 DV
Direct Vent Gas Stove

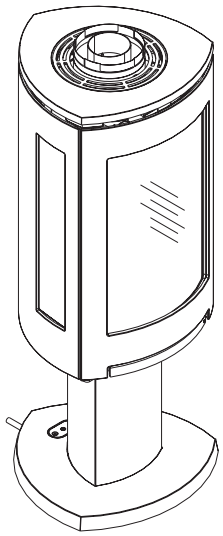

Intertek

Installation and Operation Instructions

fire-parts.com

WARNING: If the information in these instructions is not followed exactly, a fire or explosion may result causing property damage, personal injury or loss of life.

- **Do not store or use gasoline or other flammable vapors and liquids in the vicinity of this or any other appliance.**
- **WHAT TO DO IF YOU SMELL GAS**
  - **Do not try to light any appliance.**
  - **Do not touch any electrical switch; do not use any phone in your building.**
  - **Immediately call your gas supplier from a neighbor's phone. Follow the gas supplier's instructions.**
  - **If you cannot reach your gas supplier, call the fire department.**
- **Installation and service must be performed by a qualified installer, service agency or the gas supplier.**
- **In the Commonwealth of Massachusetts, a carbon monoxide (CO) detector shall be installed in the same room as the appliance.**

This appliance may be installed in an aftermarket, permanently located, manufactured home or mobile home, where not prohibited by local codes.

This appliance is only for use with the types of gas indicated on the rating plate. A conversion kit is supplied with the appliance.

ATTENTION : CES INSTRUCTIONS DOIVENT DEMUERER AVEC LE PROPRIÉTERE D'UNE MAISON.

AVERTISSEMENT: Assurez-vous de bien suivreles instructions données dans cette notice pour réduire auninimum le risque d'incendie ou d'explosion ou pour éviter tout dommage matériel, toute blessure ou la mort.

- **Ne pas entreposer ni utiliser d'essence ni d'autres vapeurs ou liquides inflammables dans le voisinage de cet appareil ou de tout autre appareil.**
- **QUE FAIRE SI VOUS SENTEZ UNE ODEUR DE GAZ:**
  - **Ne pas tenter d'allumer l'appareil.**
  - **Ne touchez à aucum interrupteur. Ne pas vous servir des téléphones se trouvant dans le bâtiment où vous trouvez.**
  - **Appelez immédiatement votre fournisseur de gaz depuis un voisin. Suivez les instructions du fournisseur.**
  - **Si vou ne pouvez rejoindre le fournisseur de gaz, appelez le service des incendies.**
- **L'installatione l'entretien doivent être assurés par un installateur ou un service d'entretien qualifié ou par le fournisseur de gaz.**

JØTUL

INSTALLER: Leave this manual with the appliance.

CONSUMER: Retain this manual for future reference.

⚠ WARNING

HOT GLASS WILL CAUSE BURNS.

DO NOT TOUCH GLASS UNTIL COOLED.

NEVER ALLOW CHILDREN TO TOUCH GLASS.

⚠ AVERTISSEMENT

Une surface vitrée chaude peut causer des brûlures.

Laisser refroidir la surface vitrée avant d'y toucher.

Ne perettex jamais à unenfant de toucher la surface vitrée.

fire-parts.com

THIS OWNER'S MANUAL PROVIDES INFORMATION TO ENSURE SAFE INSTALLATION AND EFFICIENT, DEPENDABLE OPERATION OF YOUR FIREPLACE INSERT. PLEASE READ THESE INSTRUCTIONS IN THEIR ENTIRETY AND MAKE THEM AVAILABLE TO ANYONE USING OR SERVICING THIS GAS INSERT.

DO NOT ATTEMPT TO ALTER OR MODIFY THE CONSTRUCTION OF THIS APPLIANCE OR ITS COMPONENTS. ANY MODIFICATION OR ALTERATION WILL VOID THE WARRANTY, CERTIFICATION AND LISTING OF THIS APPLIANCE.

THIS HEATER MUST BE INSTALLED AND MAINTAINED BY A QUALIFIED SERVICE AGENCY.

Suggested Tools for Installation and Service

- External regulator (for Propane only)
- Piping which complies with local code
- Manual shut-off valve - T-Handle required in Massachusetts
- Sediment trap - if required by code
- Tee joint
- Pipe wrench
- Pipe sealant
- 10 mm open end wrench
- 1/2", 7/16" open end wrench
- Phillips head screwdriver
- Flat head screwdriver
- 1/4" nut driver
- Work Gloves
- Safety glasses
- Torx T-20 screwdriver
- Tin snips

Installation Requirements for the Commonwealth of Massachusetts

THIS PRODUCT MUST BE INSTALLED BY A LICENSED MASTER OR JOURNEYMAN PLUMBER OR GAS-FITTER WHEN INSTALLED IN THE COMMONWEALTH OF MASSACHUSETTS.

1. If there is not one already present, on each floor level where there are bedroom(s), a carbon monoxide detector and alarm shall be placed in the living area outside the bedroom(s). The carbon monoxide detector shall comply with NFPA 720 (2005 Edition).
2. A carbon monoxide detector shall:
   a) Be located in the room that houses the appliance or equipment;
   b) Be either hard-wired or battery powered or both; and
   c) Shall comply with NFPA 720 (2002 Edition).
3. A Product-approved vent terminal must be used, and if applicable, a Product-approved air intake must be used. Installation shall be in strict compliance with the manufacturer's instructions. A copy of the installation instructions must remain with the appliance or equipment at the completion of the installation.

NATIONAL FIREPLACE INSTITUTE
NFI
CERTIFIED
www.nficertified.org

We recommend that our gas products be installed and serviced by professionals who are certified in the U.S. by the National Fireplace Institute® (NFI) as NFI Gas Specialists.

Canada
ENERGUIDE
Gas Fireplace Energy Efficiency Rating
72.41%
Based on CSA P.4.1-02
Model No. Jøtul GF 370 DV

ENER CHOICE
ENERCHOICE.ORG

Table of Contents

Installation & Service Tools 2
Specifications 4
General Information 5
Safety Information 6
Installation
- Hearth Requirements 7
- Clearances 7

Vent Requirements
- Approved Vent Manufacturers 8
- Vertical Termination 8
- Masonry Chimney Conversion 9
- Horizontal Termination 10
- Vent Termination Clearances 11
- Vent Restriction Adjustments 12
- Vent Termination Diagram 13

Stove Assembly
1. Glass Frame Removal 14
2. Routing the Power Supply 14
3. Gas Connection 14
4. Gas Pressure 15
5. Fuel Conversion 16
6. High Altitude Adjustment 18
7. Skamol Panel Installation 19
8. Reflective Panel Installation 19
9. River Rock Installation 19
10. StarFire Glass Installation 19
11. Log Set Installation 20
12. Outer Decorative Glass Panels 21
13. System Check 22
14. Flame Picture Adjustment 23

Operation
- System Overview 24
- Control Functions 25
- Wiring Diagrams 28

Maintenance
- Annual Cleaning 30
- Glass Replacement 30
- Battery Replacement 31
- Accent Lamp Replacement 31

Illustrated Replacement Parts ..... 32 - 35
Appendix
- Mobile Home Installation 36
- Correct Optional Flame Pictures 36

Waranty Statement 37
Lighting Instructions 39

fire-parts.com

Unpacking the Stove

1. Before beginning the installation, inspect the stove for shipping damage and immediately report any evidence of damage to your dealer.
2. **Confirm stove contents.**

   The Jøtul GF 370 DV includes the following loose items shipped in the Miscellaneous Hardware bag;
   - 4 mm hex key - *used to remove the front glass panel for access to the firebox.*
   - Remote Control Transmitter
   - Remote Control Wall Mount Bracket
   - Extension Power Cord
   - M6 x 12 mm hex bolts, 4 - *used with Outer Decorative Glass Panels.*
   - Propane Fuel Conversion Kit 156800
3. **Confirm Firebox Components.**

   The firebox accessories have been packed in separate boxes, and will include one or more of the following items:
   - Traditional Log Set 156789
   - StarFire Glass 156815, Clear or 157342, Black
   - River Rocks 157428
   - Skamol Panels 156816
   - Reflective Glass Panels 156817
   - Tumbled Stones 157229
4. **Remove Pallet Screw.** See fig. 1.

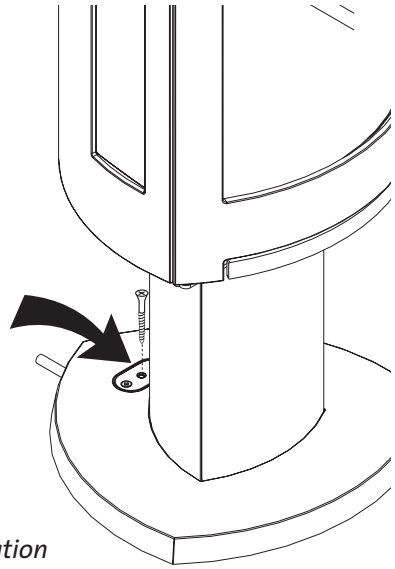

Figure 1.
Pallet screw location

Jøtul GF 370 DV
Direct Vent Gas Stove

Manufactured and Distributed by:
Jøtul North America
Gorham, Maine USA

Jøtul AS
Fredrikstad, Norway

Test Standards

This appliance complies with National Safety standards and is tested and listed by Intertek Testing Services of Middleton, Wisconsin.

In addition, the Jøtul GF 370 DV has been tested and listed as a direct vent gas fireplace heater and listed to ANSI Z21.88-2009/CSA 2.33-2009 and CAN/CGA 2.17-M91.

Specifications

Input Rates

Natural Gas
28,000 BTU/hr. maximum input
18,173 BTU/hr. minimum input

Propane
24,000 BTU/hr. maximum input
20,750 BTU/hr. minimum input

Inlet Pressure:	**MIN**	**MAX**
Natural Gas:	5.0 WC (1.24 kPa)	7.0 WC (1.74 kPa)
Propane:	11.0 WC (2.74 kPa)	13.0 WC (3.24 kPa)

Manifold Pressure:	**MIN**	**MAX**
Natural Gas:	1.6 WC (.398 kPa)	3.5 WC (0.87 kPa)
Propane:	6.4 WC (1.59 kPa)	10.0 WC (2.48 kPa)

- Steady State Efficiency: 75% NG / 69% LP
- AFUE: 71.2% NG / 66.8% LP
- CSA P4. 1-02 Fireplace Efficiency: 72.4 %
- Intermittent Pilot Ignition (IPI)
- Continuous Pilot Ignition Mode (CPI or "standing pilot") is available.
- Power Requirement: 120 VAC for Fan, Lamp, and Burner Control Module
- Remote Control Transmitter batteries preinstalled, 3, AAA - 1.5 v
- Remote Control Receiver batteries supplied: 4, AA
- Fan Control Module: 120V / 60 Hz

Accessories

Traditional Log Set ..... #156789
River Rocks Set ..... #157428
Tumbled Stones ..... #157229
StarFire Glass Embers, Black ..... #157342
StarFire Glass Embers, Clear ..... #156815
Reflective Glass Firebox Liner ..... #156817
Decorative Outer Glass Panel Kit ..... #350995
Fuel Conversion Kit, Propane - 33% TD ..... #156800
Fuel Conversion Kit, Natural Gas - 33% TD .....#156801
High Altitude Adjustment Kit, NG ..... #156822

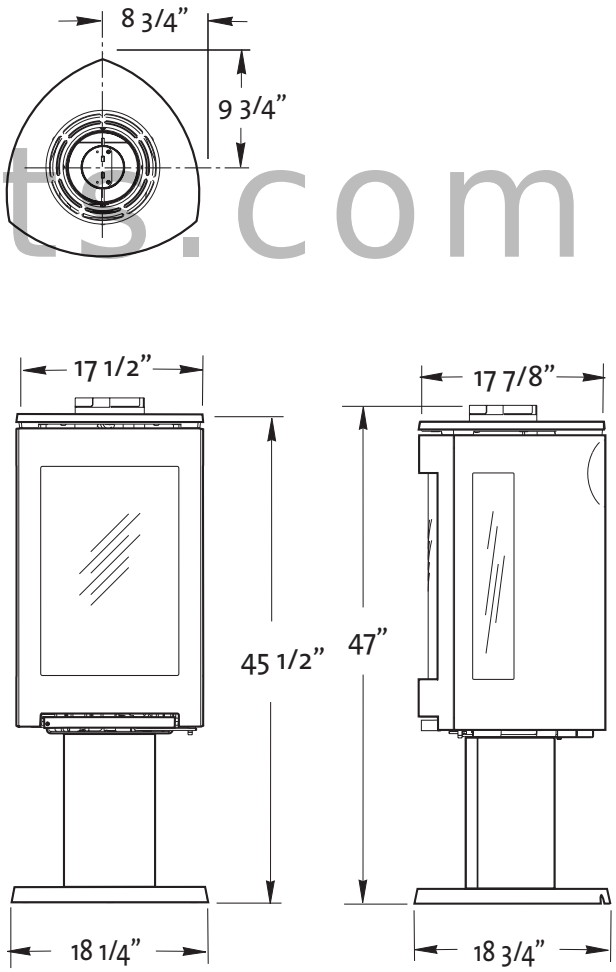

Figure 2. Overall dimensions

fire-parts.com

General Information

THIS HEATER MUST BE INSTALLED AND MAINTAINED BY A QUALIFIED SERVICE AGENCY.

DO NOT ATTEMPT TO ALTER OR MODIFY THE CONSTRUCTION OF THIS APPLIANCE OR ITS COMPONENTS. ANY MODIFICATION OR ALTERATION WILL VOID THE WARRANTY, CERTIFICATION AND LISTING OF THIS APPLIANCE.

WARNING: FAILURE TO POSITION THE PARTS IN ACCORDANCE WITH THE DIAGRAMS HEREIN OR FAILURE TO USE ONLY PARTS SPECIFICALLY APPROVED WITH THIS APPLIANCE MAY RESULT IN PROPERTY DAMAGE OR PERSONAL INJURY.

IMPORTANT: SAVE THESE INSTRUCTIONS.

1. The installation and repair of this appliance must be done by a qualified service person. Failure to properly install and maintain this heater could result in an unsafe or hazardous installation, which may result in a fire, explosion, property damage, personal injury or loss of life.
2. This appliance should be inspected before use and at least annually. More frequent cleaning may be required due to excessive lint from carpeting, bedding material, etc. It is imperative that control compartments, burners and circulating air passageways of the appliance be kept clean.

   `S'assurer que le bruleur et le compartiment des commandes sont propres. Voir les instructions d'installation et d'utilisation qui accompagnent l'appareil.
3. This appliance may be installed in an aftermarket permanently located, manufactured (mobile) home, where not prohibited by local codes. This appliance is only for use with the type(s) of gas indicated on the rating plate. This appliance is not convertible for use with other gases, unless a certified kit is used.

   Cetappareil peut être installé dans un maison préfabriquée (mobile) déjà installée à demeure si les règlements locaux le permettent.

   Cet appareil doit être utilisé uniquement avec les types de gas indiqués sur la plaque signalétique. Ne pas l'utiliser avec d'autres gas sauf si un kitde conversion certifié est installé.
4. The installation must conform to local codes. Your local Jøtul authorized dealer can assist you in determining what is required in your area for a safe and legal installation. Some areas require a permit to install a gas burning appliance. Always consult your local building inspector or authority having jurisdiction to determine what regulations apply in your area.

   In the absence of local codes, the installation requirements must comply with the current National codes. In the U.S., these requirements are established in the National Fuel Code, ANSI Z223.1.(NFPA 54). In Canada, the codes have been established in CAN/CGA B149 Fuel Installation Code.

   Installer l'appareil selon les codes ou reglements locaux, ou, en l'absence de tels reglements, selon les Codes d'installation CAN/CGA-B149.
5. Do not operate this fireplace if any part of it has been under water..

   Immediately call a qualified service technician to inspect the heater and to replace any part of the control system and any gas control which has been under water.

   Ne pas se servir de cet appareil s'il a ete' plonge dans l'eau, completement ou en partie. Appeler un technicien qualifie pour inspecter l'appareil et remplacer toute partie du syste'me de controle et toute commande qui ont ete plonges dans l'eau.
6. Do not operate the fireplace with the glass front removed, cracked or broken. Replacement of the glass should be done by a licensed or qualified service person. Only remove glass for routine service. Always handle glass carefully.

   Pour utilisation avec les portes en verre cerifiers aved l'appareil seulemend ou. Ne pas utiliser avec des portes on verre.
7. Notify your insurance company before proceding with installation of this fireplace.

fire-parts.com

3.0 Safety Information

- Due to the high operating temperatures this appliance should be located out of traffic and away from furniture, draperies, etc. Maintain proper clearance to combustible mantels and fireplace trim.
- Children and adults should be alerted to the hazards of high surface temperatures and should stay away to avoid burns or clothing ignition.
- Enfants et adultes doivent être avertis des dangers des températures de surface élevées et devraient rester à l'écart pour éviter les brûlures ou l'inflammation des vêtements.
- Young children should be supervised while they are in the same room as the appliance. Toddlers, young children and others may be susceptible to accidental contact burns. A physical barrier, such as a child guard, is recommended to be used if there are at-risk individuals in the house. To restrict access to a fireplace or stove, install an adjustable safety gate to keep toddlers, young children and other at-risk individuals out of the room and away from hot surfaces.
- Les jeunes enfants doivent être surveillés pendant qu'ils sont dans la même pièce que l'appareil. Les tout-petits, les jeunes enfants et d'autres peuvent être sensibles aux brûlures par contact accidentel. Une barrière physique, comme un garde de l'enfant, est recommandé pour être utilisé si il ya des personnes à risque dans la maison. Pour restreindre l'accès à une cheminée ou un poêle, installer une barrière de sécurité réglable pour garder les tout-petits, les jeunes enfants et autres personnes à risque à se sortir de la salle et à l'écart des surfaces chaudes.
- Any safety screen or guard removed for servicing an appliance must be replaced prior to operating the appliance.
- Tout écran ou grille de protection pour l'entretien d'un appareil doit être remplacé avant de faire fonctionner l'appareil.
- Clothing or other flammable materials should not be placed on or near the fireplace.
- Surveiller les enfants. Garder les vêtements, les meubles, l'essence ou autres liquides à vapeur inflammables lin de l'appareil.
- Never allow anyone to use the fireplace if they are unfamiliar with its operation.
- NEVER store or use gasoline or any other flammable vapors or liquids in the vicinity of the fireplace.
- Never burn any solid materials (wood, cardboard, paper, coal, etc.) in this gas fireplace. Use with natural gas or propane fuel ONLY.
- Do not slam or strike the glass panel.
- This appliance is NOT for use with aftermarket glass doors. This appliance is approved for use only with the surround panel options listed on page 4 of this manual.
  Cet appareil ne sert pas avec des portes en verre de marché des accessoires. Cet appareil est approuvé pour l'usage seulement avec les revêtements de porte, entoure les options de panneau et en verre de panneau énumérées à la page 3 de ce manuel.
- Wear gloves and safety glasses while performing maintenance procedures.

WARNING!

Shock Hazard. Can cause severe injury or death. This appliance is powered by line voltage. Do not try to repair the components in this appliance. In no way are the component enclosures to be tampered with or opened. Disconnect from line voltage during installation or performing any maintenance.

ATTENTION!

- Shut off the main gas supply to the appliance during battery replacement to the receiver or burner control.
- Always shut off the main gas supply to the appliance during inspection, maintenance, or cleaning.

fire-parts.com

Electrical Hazards

- Be aware of electrical wiring locations when cutting holes in walls and ceilings for termination.
- This appliance power supply must be electrically grounded in accordance with local codes or, in the absence of local codes, with the current ANSI/NFPA 70, National Electrical Code or CSA C22.1-Canadian Electrical Code.
- This appliance power supply incorporates a three-prong (grounding) plug for protection against shock hazard and should be plugged directly into a properly grounded three-prong receptacle. DO NOT CUT OR REMOVE THE GROUNDING PRONG FROM THE PLUG.
- Do not disconnect the lamp and fan power cords from the appliance power supply (Fan Control Module). Use the rocker switch to control power to these parts.
- Always disconnect (unplug) the main power supply from its outlet when performing routine service on this appliance.

Installation

Stove Location

In selecting a location for the stove, consider the following points:
1) Heat distribution
2) Vent termination requirements
3) Gas supply routing
4) Traffic areas, furniture, draperies, etc.
5) 120V electrical outlet availability

This stove may be located on or near conventional construction materials, however, proper clearance to combustibles must be maintained in order to provide adequate air circulation around the appliance. Also, it is important to provide adequate access around the stove for servicing and proper operation.

The clearances specified in this manual are the minimum requirements established as a result of safety testing. A combustible material is anything that can burn; i.e. sheet rock , wall paper, wood, fabrics, etc. These surfaces are not limited to those that are visible and also include materials that may be located behind non-combustible materials.

fire-parts.com

If you are not sure of the combustible nature of a material, consult your local fire officials. "Fire-resistant" materials are considered to be combustible. They may be difficult to ignite, but will burn. "Fire -rated" sheet rock is also considered combustible.

Hearth Requirements

The Jøtul GF 370 DV has been approved for installation directly on combustible floor materials, including carpeting. No additional floor protection is required, however, we recommend that the stove be installed on a solid surface.

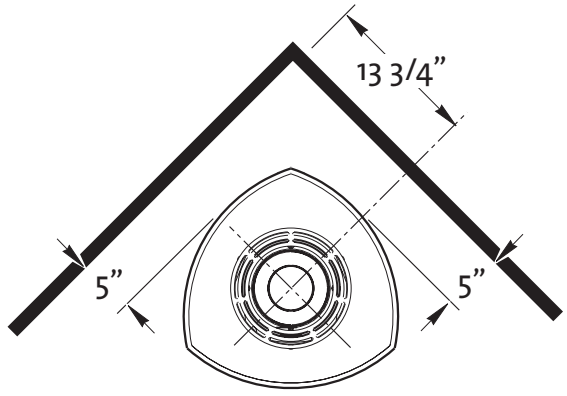

Figure 3. Corner Clearances.

Stove and Vent Clearance Requirements

Minimum Clearances: See figs. 3-5.

Rear: 3" (76 mm) - from Rear of the unit

Ceiling: 16 3/4" (425 mm) - from Stove Top

Corner: 5" (127 mm) - from Stove Top

Sides: 7" (178 mm) - from Stove Top

Minimum Clearances from the Vent Pipe to Combustibles:

Horizontal Run:

Off the top of the pipe - 2" (51 mm) Alcove - 7" (178 mm)

Off the sides and bottom - 1" (25 mm)

Vertical Run:

All sides - 1" (25 mm)

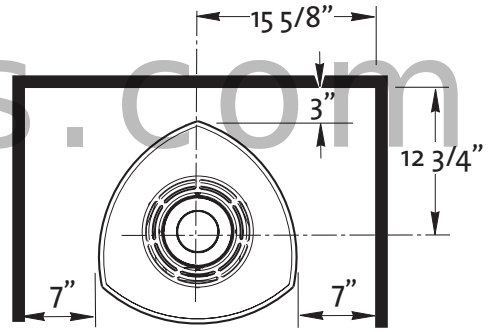

Figure 4. Alcove and Wall Clearances.

ALCOVE SPECIFICATIONS:

Maximum Alcove Depth:	21 3/4" (55.2 cm)
Minimum Alcove Width:	31 1/4" (79.3 cm)
Minimum Ceiling Height:	62 1/4" (158.1 cm)

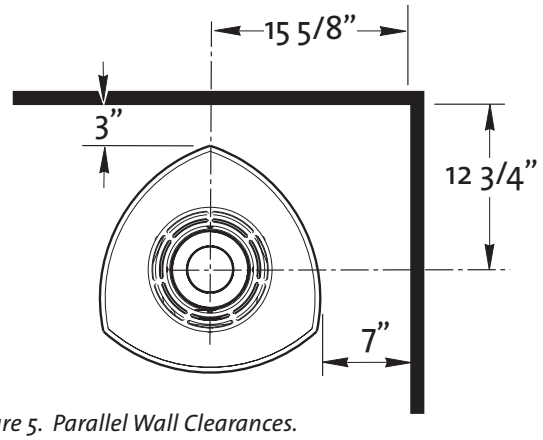

Figure 5. Parallel Wall Clearances.

Venting Requirements

There are three types of venting configurations approved for use with this appliance:

- Vertical Venting / Vertical Termination
- Vertical Venting / Horizontal Termination
- Horizontal Venting / Snorkel Termination

This appliance is approved for use with the 4/6 direct vent systems manufactured by the companies listed on page 8. Use parts of one manufacturer only - DO NOT MIX VENT COMPONENTS FROM DIFFERENT MANUFACTURERS WITHIN THE SAME SYSTEM.

Installation of any components not manufactured or approved by Jøtul or failure to meet all clearance requirements will void all warranties and could result in property damage or bodily injury.

The approved vent configurations described in this manual are derived from extensive testing under controlled laboratory conditions. Gas appliance performance can be negatively affected by variables present in the installation environment, i.e.; atmospheric pressure, strong prevailing winds, adjacent structures and trees, snow accumulation, etc. These conditions should be taken into consideration by the installer and stove owner when planning the vent system design.

fire-parts.com

Approved Vent Manufacturers

The Jøtul GF 370 DV stove is approved for installation with direct vent chimney components supplied by the following manufacturers:

Simpson Dura-Vent, Inc.
P.O. Box 1510
Vacaville, CA 95696-1510 800-835-4429

Selkirk Corporation
1301 W. President George Bush Hwy, Suite 330
Richardson, TX 75080-1139 800-992-8368

American Metal Products (Amerivent)
8601 Hacks Cross Rd.
Olive Branch, MS 38654 800-423-4270

Security Chimneys International Limited
2125 Monterey, Laval, Québec
Canada, H7L 3T6 450-973-9999

Metal-Fab, Inc.
P.O. Box 1138
Wichita, KS 67201 316-943-2351

ICC, Inc.
400 J-F Kennedy St. Jerome, Quebec
Canada, J7Y 4B7 450-565 6336

IMPORTANT

- JOINT SEALING REQUIREMENT: APPLY A 1/8" BEAD OF HIGH-TEMPERATURE SEALANT OR MIL-PAC® TO THE MALE SECTION OF THE INNER VENT PIPE. THE CEMENT SHOULD FORM A SEAL BETWEEN THE INNER AND OUTER PIPES. SEE FIG. 5. SEE VENT MANUFACTURER'S INSTRUCTIONS.

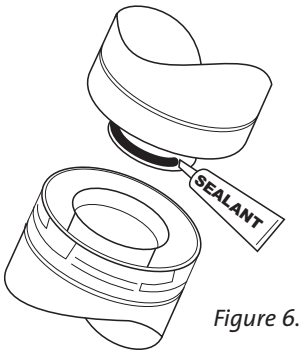

Figure 6.

- NEVER MODIFY ANY VENTING COMPONENT, OR USE ANY DAMAGED VENTING PRODUCT.
- THE GAS APPLIANCE AND VENT SYSTEM MUST BE VENTED DIRECTLY TO THE OUTSIDE OF THE BUILDING AND NEVER ATTACHED TO A CHIMNEY SERVING A SOLID FUEL OR GAS BURNING APPLIANCE. EACH DIRECT VENT GAS APPLIANCE MUST HAVE ITS OWN SEPARATE VENT SYSTEM. COMMON VENT SYSTEMS ARE PROHIBITED.
- IF VENTING SYSTEM IS DISASSEMBLED FOR ANY REASON, REINSTALL PER THE MANUFACTURER'S INSTRUCTIONS PROVIDED FOR THE INITIAL INSTALLATION.

Vertical Venting and Termination

The Jøtul GF 370 DV can be vertically vented through a roof or ceiling. Follow these guidelines

- Steep roofs, nearby trees, or predominantly windy conditions, can promote poor draft or down draft conditions. In such cases, an increase to the height of the vent may improve performance.
- If an offset or elbow is necessary in the vertical rise, the vent pipe must be supported every three feet to avoid excessive stress on the offsets. Use listed Wall Straps from any of the approved vent suppliers.
- A maximum of two 90° or four 45° elbows may be used in a vertical termination. Whenever possible, use 45° elbows instead of 90° elbows as they offer less restriction to the flow of flue gases and intake air.
- A listed firestop is required at any floor penetration. The opening should be framed in according to the manufacturer's instructions.
- Always maintain a minimum 1" clearance from all sides of the vertical vent system to any combustible material.
- Minimum vertical termination height: 6 ft. of vent pipe.

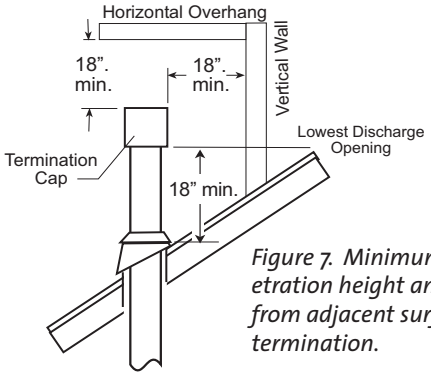

Figure 7. Minimum roof penetration height and clearance from adjacent surfaces - vertical termination.

- IT IS NECESSARY to add restriction to a vertical vent installation to compensate for excessive draft. See page 13; Exhaust Restriction Adjustment.
- GAS VENT HEIGHT: In no case shall any discharge opening on the cap be less than 18" (457 mm) horizontally from the roof surface. See fig. 7.
- Maximum Vent Height: 35 ft. above the appliance.

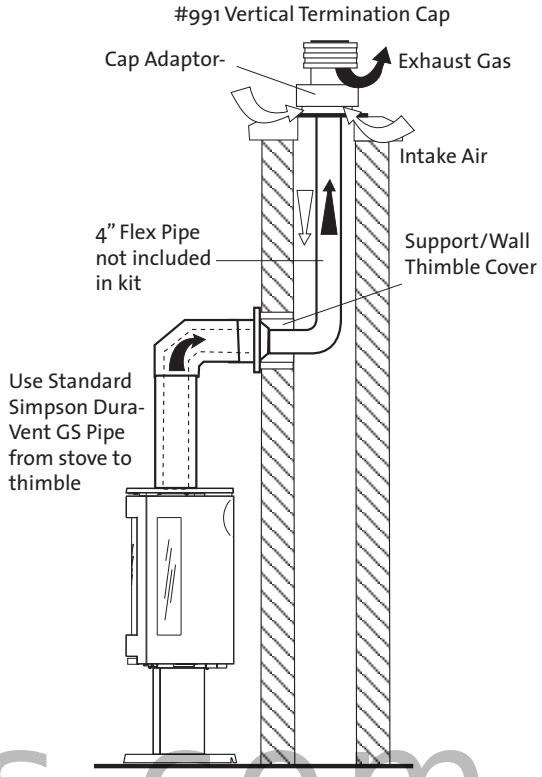

Figure 8. Vent System through a masonry chimney using the Simpson Dura-Vent Chimney Conversion Kit 46DVA-KMC and 46DVA-KCT components. Other manufacturers use similar designs. Conversion kits are also available for use with listed prefabricated chimneys.

fire-parts.com

Masonry or Prefabricated Chimney Conversion

The GF 370 DV is approved for use with direct vent chimney conversion kits in a masonry chimney or a prefabricated solid fuel listed chimney. These are available from most of the manufacurer's listed on page 8.

The following installation requirements must be followed:

1. **Use the restrictor zone guidelines in the Vent Window Diagram, fig. 17**. In masonry chimney, a fireclay liner or listed steel liner, must be contained within the entire length of the chimney.
3. Overall venting should not exceed 35 ft. (10.67 m).
4. The liner must have an inside dimension of 6" round or greater.
5. Prefabricated chimneys must be UL 103 or ULC S-629 listed and have a minimum INSIDE diameter of 6 inches, (150 mm). Prefabricated chimneys must be listed for the specific manufacturer's conversion kit.

IMPORTANT NOTICE

THE USE OF AN EXISTING CHIMNEY AS AN AIR INTAKE IS NOT COVERED UNDER THE ANSI Z21.88-1999-CSA 2.33-M99 TEST METHODS AND RESULTING ITS/WHI PRODUCT CERTIFICATION. THE CODE AUTHORITY HAVING JURISDICTION MUST BE CONSULTED PRIOR TO PROCEEDING WITH THIS INSTALLATION METHOD.

Horizontal Termination

- **Minimum vertical rise** from the vent collar is a 24" section vent pipe. See fig. 9. Minimum horizontal run is 12" with natural gas and 18" with propane.
- A maximum of two 90° or four 45° elbows may be used in a horizontal termination. Whenever possible, use 45° elbows instead a 90° elbow as they offer less restriction to the flow of flue gases and intake air. Reduce the overall horizontal run by 4 feet for each 90° elbow, and 2 feet for each 45° elbow.
- **Snorkel Termination - (14" or 36"):**
  NATURAL GAS ONLY. DO NOT USE SNORKEL TERMINATION WITH PROPANE FUEL.
  A horizontal vent run may be made with a 90° elbow directly to the rear of the stove only when terminated by a 14 or 36 inch snorkel cap. Fig. 10 shows the minimum vent pipe requirements.

  14" Snorkel: The maximum horizontal vent run must not exceed a 24" section of pipe and must be a minimum of 12".
  36" Snorkel: The maximum horizontal vent run must not exceed 5 feet and must be a minimum of 12".
- **The termination cap must not be recessed into the wall or siding.** Do not fill air space in wall around termination cap with any type of insulation.
- **Wall Cut-out:** A minimum 10" X 10" square hole is adequate for proper pipe clearance through a wall, provided the vent is positioned to maintain 2" minimum clearance at the top. A 1" minimum clearance must be maintained to combustible material around the other sides. See fig. 11.
- Any horizontal run of vent must have a 1/4" rise for every foot of run toward the termination cap.
- All horizontal terminations must comply with the clearance specifications to adjacent structures as indicated in fig. 12.
- **Installation of a Vinyl Siding Standoff is required** to prevent damage to vinyl siding between the vent cap and the exterior wall.
- **A horizontal termination cap must maintain a 3" clearance to any overhead combustible projections that are 2 1/2" or less.** It must also maintain a 12" clearance from projections that exceed 2 1/2". See fig. 13.

  Vinyl siding projections require a default clearance of 18" to the vent terminal.

Figure 9. Minimum vent pipe sections required for horizontal termination:
A = 12" with NG
18" with LP

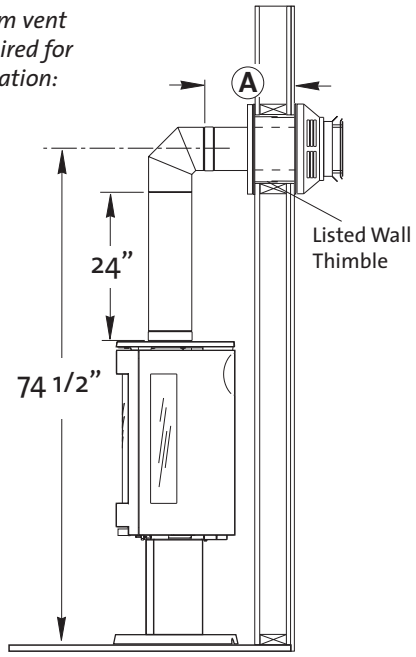

*Figure 10. Minimum vent pipe sections required for a 14" Snorkel termination - **Natural Gas ONLY.***

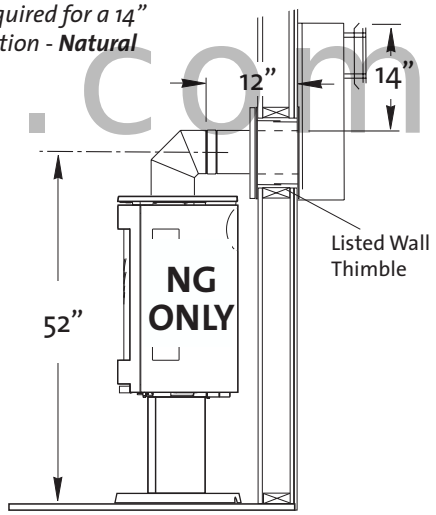

Figure 11. Install a listed wall thimble according to manufacturer's instructions to maintain required clearance to combustible materials.

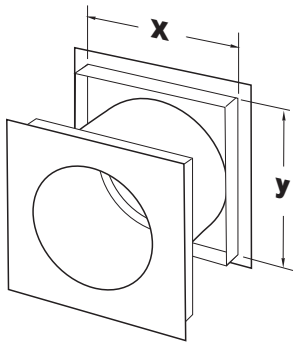

fire-parts.com

Figure 12. Horizontal termination clearances

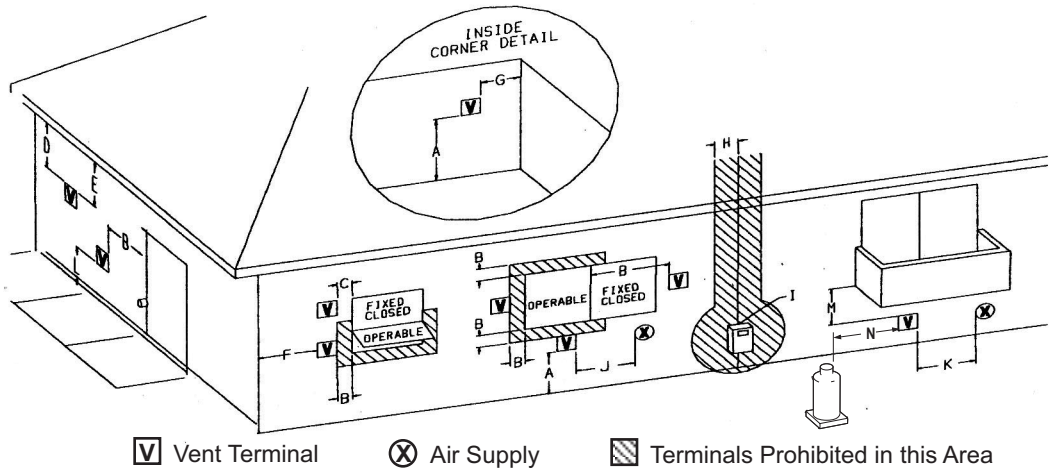

A = Clearance above grade, veranda, porch , deck, or balcony : 12 inches (30 cm) minimum.

B = Clearance to window or door that may be opened: **Min. 9 inches, U.S. / *12 inches (30 cm) CAN. We recommend 12 in. minimum to prevent condensation on the window.

C = Clearance to permanently closed window: **Min. 9 inches, U.S. / *12 inches (30 cm) CAN We recommend 12 in. minimum to prevent condensation on the window.

D = Vertical clearance to ventilated soffit located above the terminal within a horizontal distance of 2 feet (60 cm) from the center line of the terminal: 18 inches (46 cm) minimum.

E = Clearance to unventilated soffit: 12 inches (30 cm) minimum.

F = Clearance to outside corner: **Min. 9 inches, U.S. / *12 inches (30 cm) CAN. We strongly recommend 12 inches, particularly where windy conditions prevail.

G = Clearance to inside corner: ** Min. 6 inches, U.S. / *12 inches (30 cm) CAN. We strongly recommend 12 inches, particularly where windy conditions prevail.

H = *Not to be installed within 15 feet (4.5 m) above a meter/regulator assembly within 3 feet (90 cm) horizontally from the center line of the regulator.

I = Clearance to service regulator vent outlet: 3 feet (91 cm) minimum.

J = Clearance to non-mechanical air supply inlet to building or the combustion air inlet to any other appliance: 12 inches (30 cm) minimum.

K = Clearance to a mechanical air supply inlet: **Min. 3 feet (91 cm) above if within 10 feet horizontally, U.S. / *6 feet (1.83 m) minimum / CAN

L = [1] Clearance above paved sidewalk or a paved driveway located on public property: 7 feet (2.1 m) min.

M = Clearance under veranda, porch, deck, or balcony: 12 inches (30 cm) minimum.[2]

N = Clearance to propane tank relief valve and filler connection***:
5 feet (1.52 m) minimum to tanks not filled on site
10 feet (3.05 m) minimum to tanks filled on site from bulk truck

* In accordance with CSA B149 Installation Codes.
** In accordance with the current ANSI Z223.1/NFPA 54, National Fuel Gas Code. Note: Local Codes and Regulations may require different clearances.

[1] A vent shall not terminate directly above a sidewalk or driveway which is located between two single family dwellings and serves both dwellings.

[2] Only permitted if veranda, porch, deck, or balcony, is fully open on a minimum of two sides beneath the floor.*

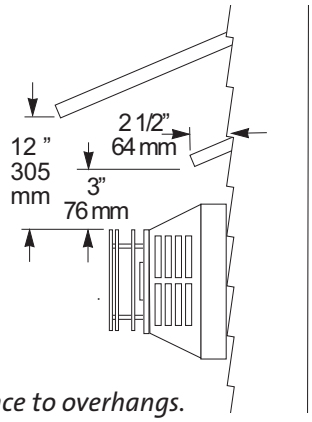

Figure 13.
Termination clearance to overhangs.

fire-parts.com

Vent Restriction Adjustments

The Jøtul GF 370 DV features adjustment controls for both intake air and exhaust to accommodate a variety of conditions that result from variables inherent in the vent configuration and environment. Both controls can be accessed from outside the firebox to allow the burner to be "dialed-in" under operation. See figures 14 and 16.

Use the Vent Termination Diagram, fig. 17, to determine which zone your vent termination falls within and make the appropriate exhaust and air intake setting adjustments. Use these settings as general guidelines to start from. The final settings will ultimately be determined by the individual characteristics of your particular installation. There are no hard and fast rules.

Exhaust Vent Restriction

Exhaust restriction prevents overly strong draft that can interfere with pilot function, cause poor combustion or a weak flame picture. The shutter is set in the fully open position at the factory. The final position of the restriction shutter is determined by where the vent termination falls within the vent window diagram.

For example, if the vent rise is 20 feet and includes one elbow in a horizontal run of 5 feet, the appropriate exhaust setting will be Full Restriction.

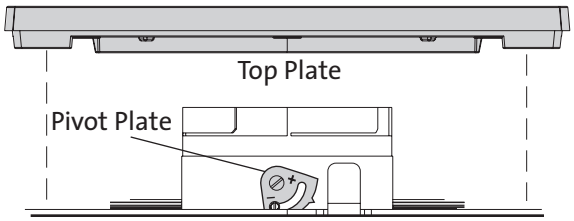

Figure 14. The Exhaust Restrictor is located within the vent adaptor collar.

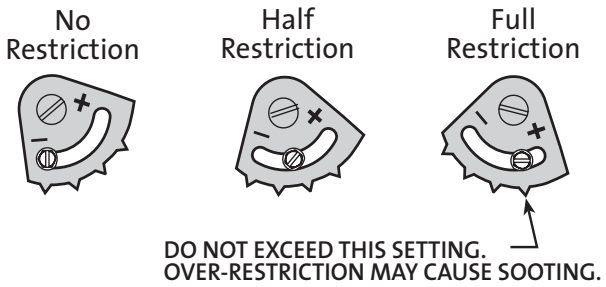

Figure 15. Exhaust Restrictor settings

Exhaust Restrictor Adjustment

1. Remove the Trim Rings from the Top Plate.
2. Loosen the locking screw and turn the restrictor pivot plate to the appropriate indicator point as specified in the vent window diagram, figure 17. After the burner has been operating for 15 minutes, make any further adjustment in 1/8" increments until the desired flame picture is achieved. **Do not exceed the fully closed setting as shown in fig. 15.** Operate the burner for 10-15 minutes between additional adjustments.
3. Tighten the locking screw and replace the Trim Rings.

Intake Air Adjustment

An Intake Air shutter plate allows further burner adjustment for taller vent runs. It is located under the firebox floor and is set fully open at the factory. See fig. 16.

The shutter has an adjustment range of 1 inch. To change the setting, loosen the wingnut and slide the gasketed shutter stem backward to the half or fully closed positions, depending on which vent zone is appropriate. Retighten the wingnut before lighting the burner to seal the gasket. Allow the flame pattern to settle in for 10- 15 minutes between each setting change.

Zone D

Vent terminations within Zone D are susceptible to draft conditions that may interfere with the intermittent Pilot Ignition functionality. In such cases, we recommend that the stove be operated only in Continuous Pilot Ignition mode.

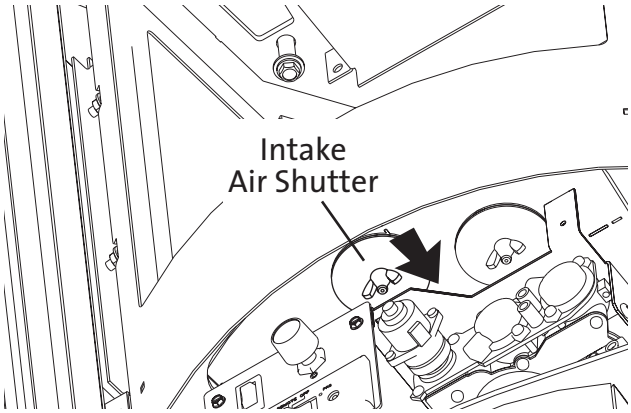

Figure 16. Air intake shutter location.

fire-parts.com

- A maximum of two 90° or four 45° elbows may be used. Whenever possible, use 45° elbows instead of 90° elbows as they offer less restriction to the flow of flue gases and intake air. Use of elbows may adversely affect IPI functionality. In such cases, CPI mode should be used.
- Reduce the overall horizontal run by 4 feet for each 90° elbow, and 2 feet for each 45° elbow.
- When two or more elbows are used in a horizontal run, a less restricted setting may be more effective than that indicated by the termination zone diagram.

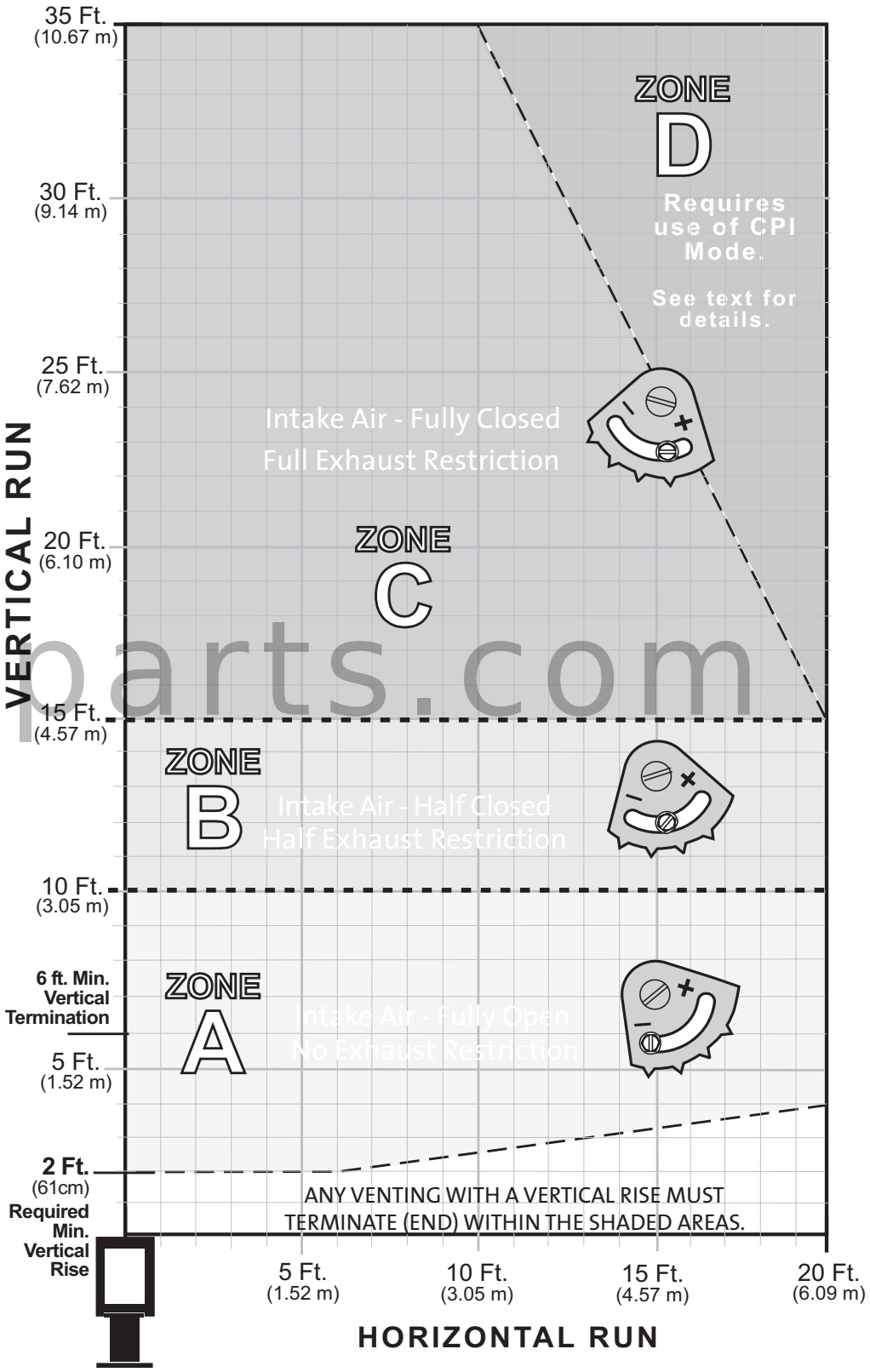

Figure 17 . Vent Termination Diagram.

fire-parts.com

Stove Assembly

1. Glass Frame Removal

To access the firebox, use the 4 mm hex key to remove the four socket head screws that attach the glass frame to the firebox. See fig. 18.

- Remove the labeled lower skamol retainer from the firebox and discard.

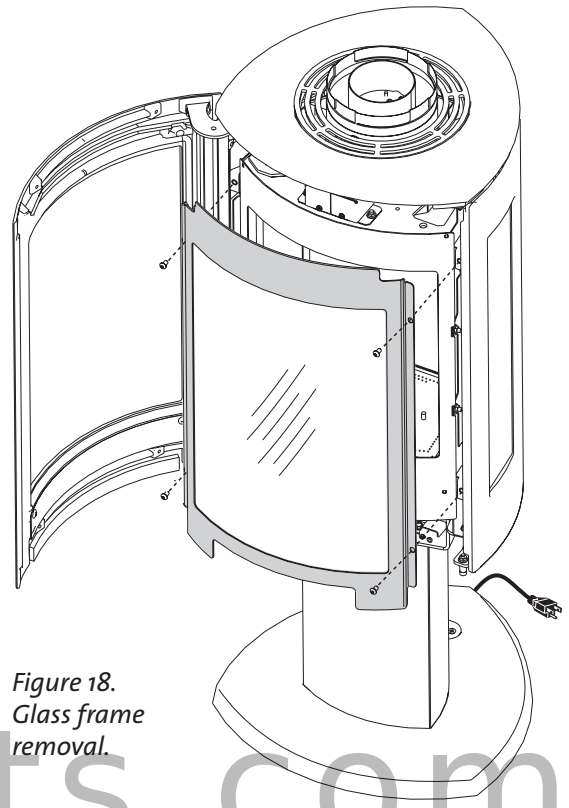

Figure 18. Glass frame removal.

2. Routing the Power Supply

The power cord located in the valve compartment is connected to the Fan Control Module which is the main power supply for all stove operating functions. Route the cord through the pedestal and out the rear of the pedestal base as in fig. 18, or through the floor.

CAUTION: Take care that the pedestal base does not pinch the power cord. You should be able to feel free play in the cord.

The 10 foot extension power cord, supplied in the hardware bag, is intended to connect the interior cord to the nearest 120V house current outlet.

DO NOT CONNECT THE STOVE TO HOUSE CURRENT UNTIL THE INSTALLATION IS COMPLETE AND YOU ARE READY TO INITIATE THE FIRST BURN.

fireparts.com

3. Connecting the Gas Supply

Gas Supply Requirements

ALL INSTALLATIONS MUST COMPLY WITH LOCAL CODE OR IN THE ABSENCE OF LOCAL CODE, MUST COMPLY WITH THE MOST RECENT EDITION OF THE NATIONAL FUEL GAS CODE ANSI Z223.1/NFPA 54 OR CAN-B149.

THIS PRODUCT MUST BE INSTALLED BY A LICENSED MASTER OR JOURNEYMAN PLUMBER OR GAS-FITTER WHEN INSTALLED IN THE COMMONWEALTH OF MASSACHUSETTS.

Shut-off Valve

All codes require a gas shut-off valve (gas cock) and union to be installed in the supply line within 6 feet of the appliance. This allows for the disconnection of the stove for servicing and maintenance. See Fig. 19.

A T-HANDLE GAS SHUT-OFF VALVE IS REQUIRED IN MASSACHUSETTS IN COMPLIANCE WITH CODE 248CMR.

The stove and gas control valve must be disconnected from the gas supply piping during any pressure testing of the system at test pressures in excess of 1/2 psig. For pressures lower than 1/2 psig, isolate the gas supply by closing the manual shut-off valve.

Control Valve Connection

The gas supply line connection to the stove flex line can be made at the rear of the base plate or through the floor. The gas supply line should be a minimum 3/8" inside diameter, or the appropriate size to provide sufficient gas pressure to the valve regardless of the input setting.

The use of flexible gas appliance connectors is acceptable in many areas in the U.S. In Canada, methods vary depending on local code. If local codes permit, use flexible gas line for ease of installation and service. For those locales where flexible gas lines are not permitted, use the 3/8" iron fitting to make the connection at the top side of the Control Valve. See fig. 19.

Secure all joints tightly using appropriate tools and sealing compounds (for propane units, be sure to use compounds that are propane resistant). Turn on gas supply and test for gas leaks using a 50/50 soapy water solution or a gas detector.

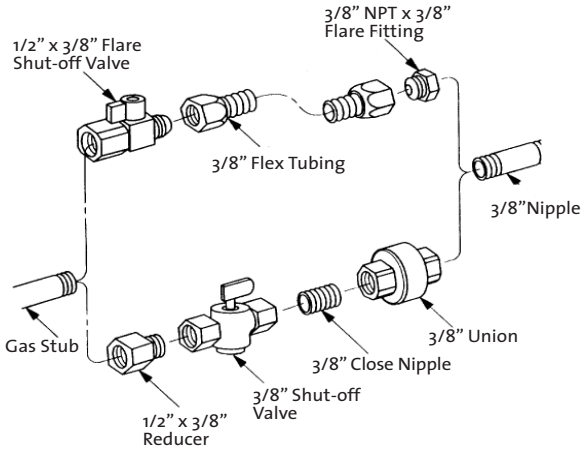

Figure 19. Gas supply valve types and fittings.

NEVER USE AN OPEN FLAME TO CHECK FOR GAS LEAKS.

ALWAYS REFER TO THE LIGHTING INSTRUCTIONS ON THE INSIDE BACK COVER OF THIS MANUAL WHEN LIGHTING THE STOVE.

Soap Solution Leak Test

- Mix a 50-50 solution of water and dish soap.
- Light appliance - see lighting instructions on the back cover of this manual or on the rating plate.
- Brush or spray all joints and connections with the soapy water solution.
- If bubbles appear at any connection or seam or a gas odor is detected, immediately turn gas control knob to the OFF position.
  Tighten or reconnect the leaking joint and retest for any gas leaks.

fire-parts.com

4. Testing Gas Pressure

Proper gas pressure provides a consistent flow of gas to the appliance and is instrumental in checking for gas leaks. There are two pressure test points on the front of the stove control valve where test gauge connections are made. See Fig. 20. Gauge connections are identified by:

- E for inlet or supply pressure (the amount of gas coming to the valve.)
- A for manifold pressure (the amount of gas that is coming out of the valve to the burner.)

The line must be disconnected from the gas supply line by closing the main supply manual gas shut-off valve (gas cock) during any pressure testing of the gas supply piping system that is equal to or exceeds pressures of 1/2 psig (3.5 kPa).

Inlet Pressure

	MIN	MAX
Natural Gas:	5.0 WC (1.24 kPa)	7.0 WC (1.74 kPa)
Propane:	12.0 WC (2.99 kPa)	14.0 WC (3.48 kPa)

Manifold Pressure

	MIN	MAX
Natural Gas:	1.6 WC (0.398 kPa)	3.5 WC (.87 kPa)
Propane:	6.4 WC (1.59 kPa)	10.0 WC (2.48 kPa)

ALWAYS TEST PRESSURES WITH VALVE REGULATOR CONTROL AT THE HIGHEST SETTING.

Symptoms of incorrect gas pressure include:

Insufficient gas pressure:

- Small pilot flame which can result in insufficient millivolts.
- Little variation in flame picture between HI and LO regulator settings.
- Insufficient gas to support more than one appliance causing nuisance outages or gas surges.

Excessive gas pressure:

- Permanent damage to valve causing complete appliance shut down.
- Too large a pilot flame resulting in overheating of the power generator and consequent shut down.
- Sooting due to impingement and/or incorrect fuel to air mix.

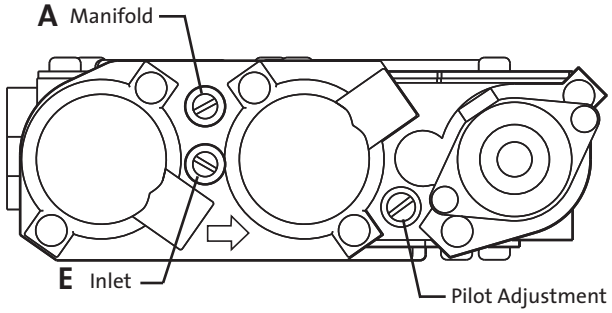

Figure 20. Pressure test points located on the front of the valve.

WARNING

DO NOT ALLOW THE INLET GAS PRESSURE TO EXCEED 14.0" WC (OR 1/2 PSIG) AS SERIOUS DAMAGE TO THE VALVE MAY RESULT.

5. Fuel Conversion

The GF 370 DV gas stove is shipped from the factory equipped to burn Natural gas. Propane fuel conversion kit 156800 is included with the stove to enable use with LP gas if necessary. The kit contains all the components needed to complete the task and ensure safe operation, including labels that must be affixed to the stove.

CAUTION: Before proceeding with this conversion, the gas supply must be shut off prior to disconnecting the electrical power.

This conversion kit shall be installed by a qualified service agency in accordance with the manufacturer's instructions and all applicable codes and requirements of the authority having jurisdiction. If the information in these instructions is not followed exactly, a fire, explosion, or production of carbon monoxide may result causing property damage, personal injury or loss of life. The qualified service agency is responsible for the proper installation of this kit. The installation is not proper and complete until the operation of the converted appliance is checked as specified in the manufacturer's instructions supplied with the kit.

Cet équipement de conversion sera installé par une agence qualifiée de service conformément aux instructions du fabricant et toutes exigences et codes applicables de l'autorisés avoir la juridiction. Si l'information dans cette Instruction n'est pas suivie exactement, un feu, explosion ou production de protoxyde de carbone peut résulter le dommages causer de propriété, pert ou blessure personnelle de vie. L'agence qualifiée do service est esponsable de l'installation propre de cet équipemetn. L'installation n'est pas propre et complète jusqu'à l'operation de l'appareil converi est chéque suivant les critères établis dans les instruction de propriétaire provision nées avel l'équipement.

fire-parts.com

Conversion Kit (LP #156800, NG #156801)

Tools required:

- 1/2" & 13 mm open end wrench or deep-well socket
- Torx T20 or slotted screwdriver
- 7/16" open end wrench
- 1/4" nut driver
- 3 mm allen wrench
- 4 mm allen wrench

Conversion Kit Contents:

- 1 regulator tower labeled for the appropriate fuel
- 2 regulator tower Torx screws
- 1 burner injector (#38 mm for NG, #53 for LP)
- 1 pilot orifice (#62 for NG, #35 for LP)
- Label A - to be completed and applied to the base of the valve compartment
- Label B - apply to the rating plate in the space indicated on the plate.
- Small valve label - apply to valve body
- Conversion instructions

Fuel Conversion Procedure

1. Turn off gas supply to the stove and disconnect from electrical power source.
2. Remove the glass frame. See fig. 18.
3. Loosen the primary air shutter wingnut and push the stem all the way back. Fig. 21.

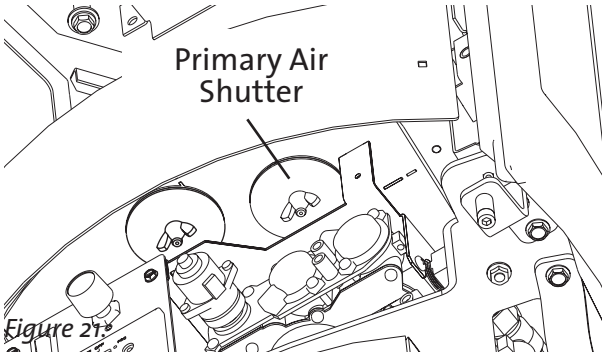

Figure 21. Air Shutter location.

4. Pull the Burner Plate forward to disengage it from the burner orifice and lift it out of the firebox.
5. Locate the main burner injector. See fig. 23 on page 17. Slide the Air Shutter out of the way and use a 1/2" open end wrench or deep-well socket to remove the burner orifice from the brass orifice holder. Replace with the orifice supplied in the kit. Tighten securely.
6. Change the Air Shutter position: Lift the shutter tube up in its hinge pin slots and turn the tube over, so that the appropriate fuel type indicator (LP or NG) is oriented facing you. See fig. 22. Push the shutter all the way back over the injector.
7. Change the Pilot Orifice. Pull the Pilot Hood off of its base. It will snap by the retainer clip shown in Fig. 23.

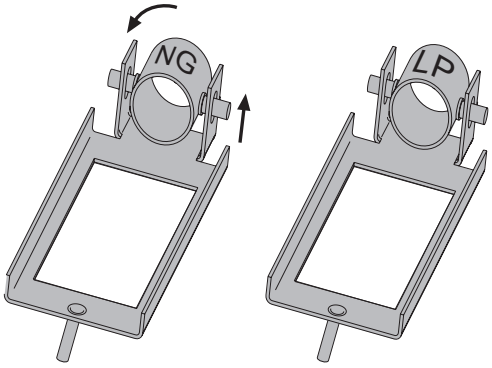

Figure 22. Primary air shutter orientation must be changed for fuel type.

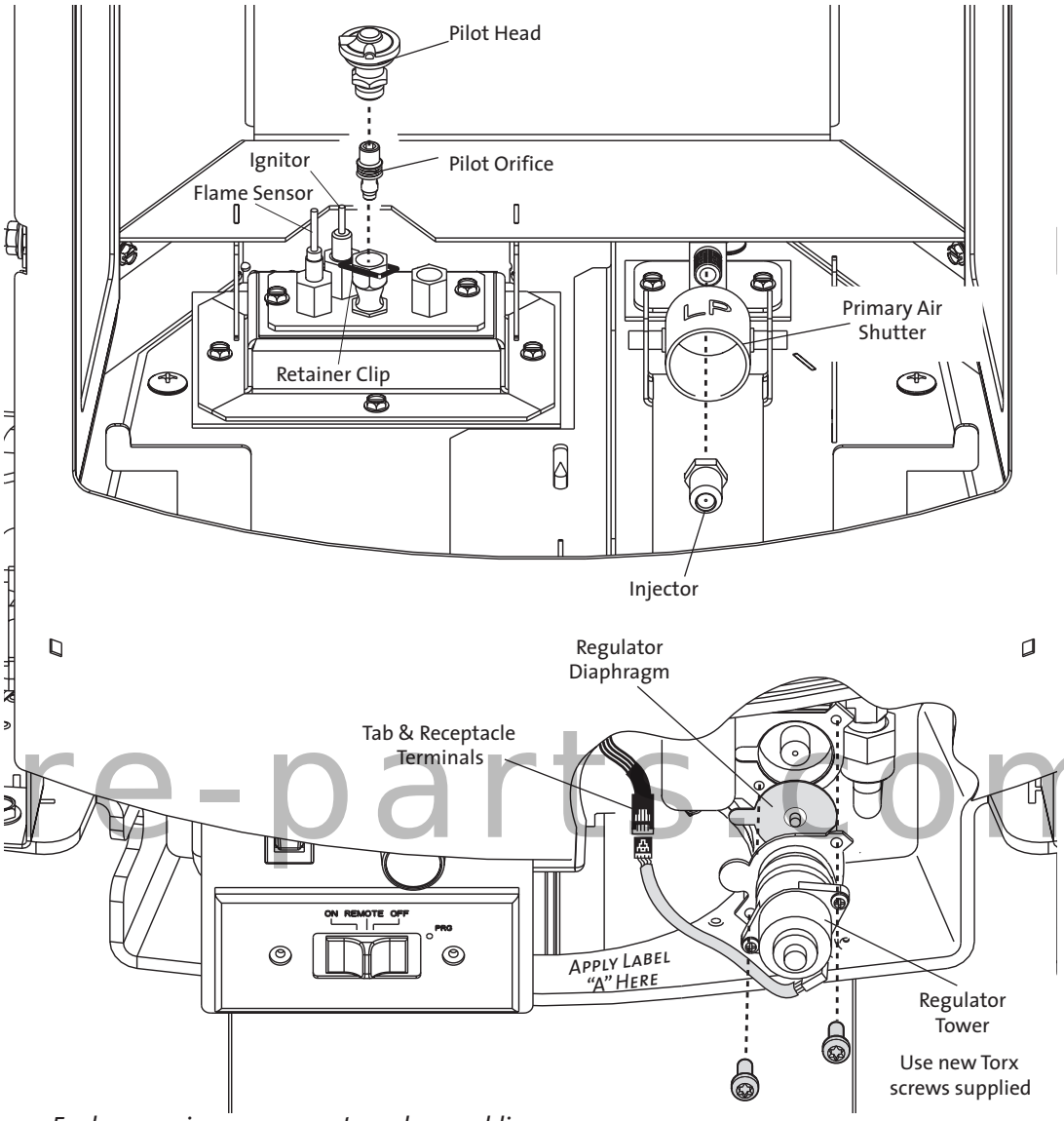

fire-parts.com

Figure 23. Fuel conversion components and assemblies

Using a 4 mm allen wrench, unscrew the pilot orifice. Replace it with the orifice from the kit. Be sure the new orifice is tightly secured to prevent by-pass leakage.

Replace the pilot hood by simply pushing it back into place on its base.

8. Reinstall the Burner Plate by engaging the venturi tube with the Air Shutter. BE CERTAIN THE BURNER IS LEVEL AND SECURELY SEATED ON THE SUPPORT LEGS ON THE FIREBOX FLOOR.
9. Replace the variable regulator. Using a Torx T-20 screwdriver, remove the two specialty screws from the regulator tower on the front of the valve. Note: To help identify which screws to remove, refer to the new regulator in the kit. See fig. 23.
10. Disconnect the Regulator wire lead from the receptacle housing terminal. Remove the regulator tower and the rubber diaphragm.
11. Install the new variable regulator tower from the kit. Be sure that the gasket is properly positioned and tighten screws securely. Connect the wire lead.
12. Apply the identification labels to the stove so that they can be seen by any person that may be servicing the stove.
    - Label "A": Apply to front lip of the valve compartment.
    - Label "B": Apply to the Rating Plate.
    - Small valve sticker: Apply to valve.
13. Install the accessory panels and burner media as appropriate. See pages 19-21.
14. Apply anti-seize lubricant to the socket head glass frame screws before reinstalling the glass frame.
15. Apply gas to the system and check for leaks using a soapy water solution or gas sensor.
16. Follow the System Check instructions on pages 22-23 for initial start-up and flame picture adjustment.

6. High Altitude Adjustment

The decreased atmospheric pressure of higher altitudes affects heat value of gaseous fuels. Most gas suppliers derate the gas intended for use at elevations above 2000 feet. Check with your gas supplier before performing derate adjustment to the burner.

This appliance may be adjusted for altitude over 2000 ft. (610 - 1371 m) for natural gas.
If the gas supplier does not derate fuels, install High Altitude Adjustment Kit 156822 for Natural gas.

DO NOT DERATE FOR PROPANE.

U.S & Canada per
ANSI Z21.88-2005•CSA 2.33-2005, CAN/CGA 2.17

For natural gas installations from 610-1370 meters (2000-4500 ft.) the orifice size (DMS) is #39. See data plate for additional information. For high altitude installations consult the local gas distributor or the authority having jurisdiction for proper rating methods. If the installer must convert the unit to adjust for varying altitudes, the information sticker must be filled out and applied to the appliance at the time of the conversion.

Cet appareil est equippé pour des altitudes compries entre o et 2000 pieds (0-610 m) seulement.

fire-parts.com

Derating Procedure

- Follow Steps 1-6 of the Fuel Conversion procedure on pages 16 to change the burner injector. Use the injector supplied with the kit. Detailed instructions are also included in the kit.
- Conduct gas leak and gas pressure tests as detailed on page 15 of this manual.
- Conduct system check and flame picture adjustments as specified on pages 22-23.

INSTALLER: Fill out the appropriate information and apply the high altitude conversion label provided to the rating plate on the appliance. See fig. 24.

This appliance has been converted for use at an altitude of_____ .
Orifice Size: _____ Manifold Press. _____
Input Btu/Hr. _____ Fuel Type _____
Date: ___/___/___ Converted by:_____
Cet appreeil a été converti au _____ Injecteur_____
Pression à la tubulure d'alimentation _____
Déoit calorifique _____

Figure 24. High Altitude Conversion Label.

7. Firebox Panel Installation

Skamol Panels and optional Reflective Glass Kit 156817

Skamol Panels

These insulating panels are installed at the factory. If desired, the panels may be painted black using any high-temperature paint. **DO NOT OPERATE THIS STOVE WITHOUT THE SKAMOL PANELS INSTALLED.**

The labeled lower panel retainer bracket should be removed from the firebox - it is intended only to prevent shipping damage.

Reflective Glass Panels

- 1/4" socket driver required

Cotton gloves are provided with the glass panels. Use them to handle the panels to prevent fingerprints on the surfaces. Fingerprints are difficult to remove. Use a clean cloth to remove any dust from the glass panels.

1. You will need to remove the pilot hood and burner plate to provide clearance to install the glass panels. Pull the pilot hood off of the pilot base - it will slip past its retainer clip. Loosen the Air Shutter and push it all the way back to disengage the burner venturi tube from the shutter. Simply lift the burner up and out of the firebox. See figs. 21 and 23.
2. Loosen, but do not remove the three #8 x 12 sheet metal screws that secure the upper panel retainer. Pull the the retainer forward about 1/4 inch. See fig. 25.
3. **Orient the rear panel, *shiny side out, textured side in.*** Tilt the panel to engage its upper edge behind the retainer bracket. Seat the panel all the way back and centered against the back wall. See fig. 26.
4. Orient the side panels, shiny side out, and sliding each behind the retainer wings. See Fig. 26a.
5. Push the retainer back against the glass panels and tighten the three sheet metal screws.
6. Replace the burner plate. When properly located, it will be level and secure.
7. Replace the pilot head. It will just snap back into place on the base.
8. Air Shutter Adjustment: Follow the guidelines on page 23 to establish the best flame picture for your particular installation.

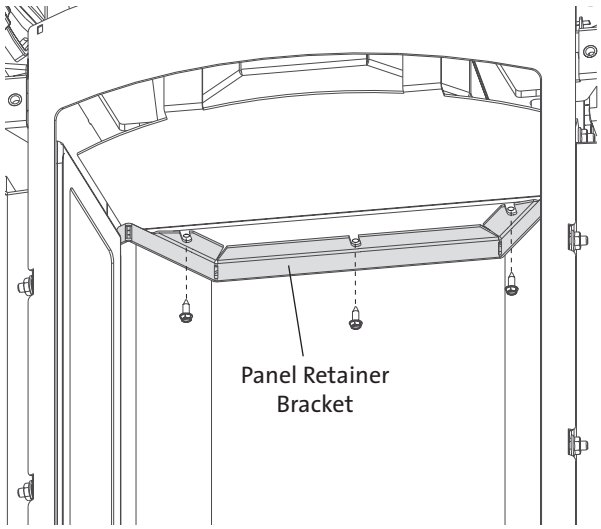

Figure 25. Loosen the panel retainer screws.

Figure 26. Install Rear Glass Panel.

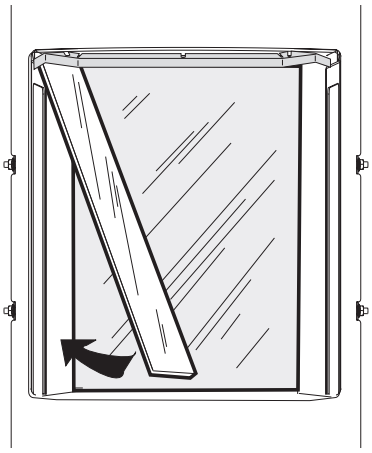

Figure 26a. Install Side Glass Panels.

8. Install Burner Media

River Rocks

CAUTION: THE ROCKS ARE FRAGILE! SUPPORT THE ASSEMBLY FROM THE BOTTOM AND HANDLE CAREFULLY!

1. Engage the River Rock bed with the two center burner pins as shown in fig. 27. Either side of the rocks may face outward as desired.
2. Evenly disperse the Ember Stones supplied over the burner plate around the log parts. **DO NOT ALLOW EMBER STONES TO BLOCK THE PILOT ASSEMBLY AREA**. The carry-over ports directly in front of the pilot must remain clear for proper pilot ignition. See figs. 29 and 65 for examples.

StarFire Glass Embers

Do not use more than the four pounds (in two, 2 lb. bags) of glass media provided. For best results, evenly spread the contents of the bag over the entire burner plate and rear skirt, mounding a crown toward the center. **DO NOT COVER THE AREA IMMEDIATELY IN FRONT OF THE PILOT ASSEMBLY.** The carry-over ports directly in front of the pilot assembly must be clear to ensure proper pilot ignition. See fig. 66 page 34.

fire-parts.com

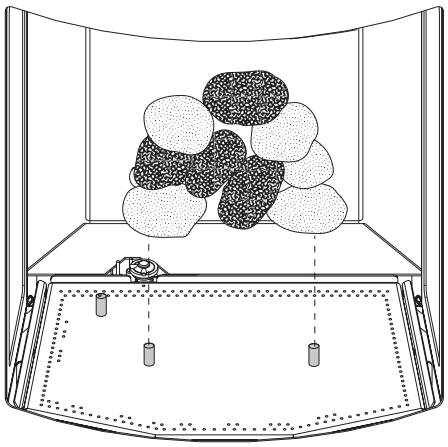

Figure 27. Set River Rock assembly on pins.

Tumbled Stones

Install the stones according to the instructions supplied with that kit.

Install the Log Set

The three-piece log set includes a bag of ember stones that simulate glowing coals when the burner is operating.

Use workgloves and handle the individual logs carefully, supporting each with both hands. Install the Logset and Ember Stones as shown in figures 28-31.

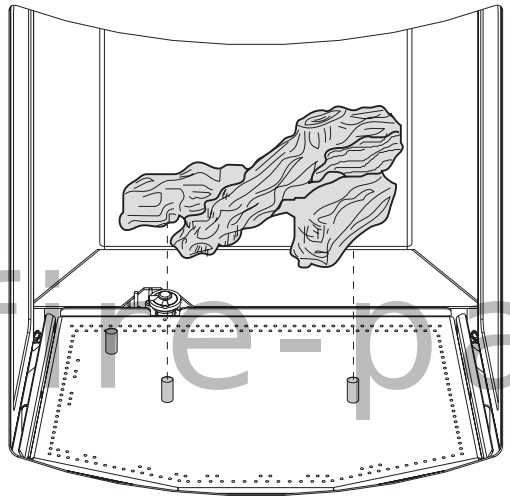

Figure 28. Engage the Bottom Log with the two center pins in the burner plate.

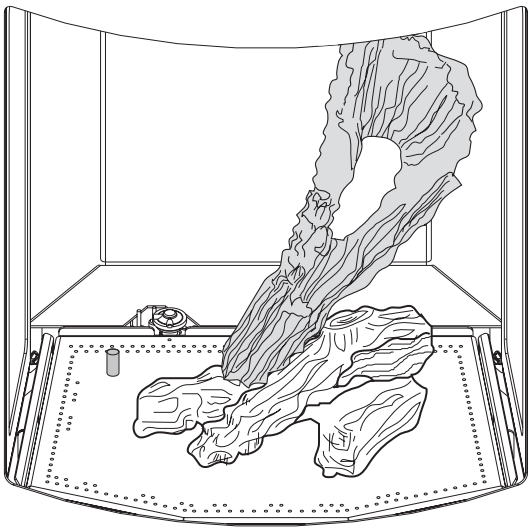

Figure 29. Lean the Right Log up against the upper right corner of the firebox and engage its toe with the indentation in the Bottom Log.

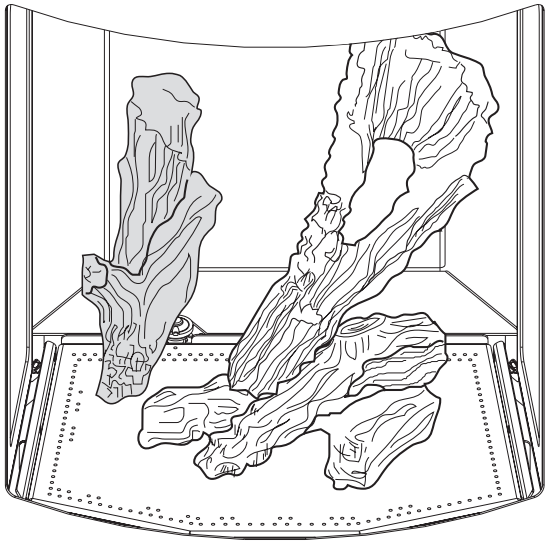

Figure 30. Engage the Left Log with the rear burner plate pin.

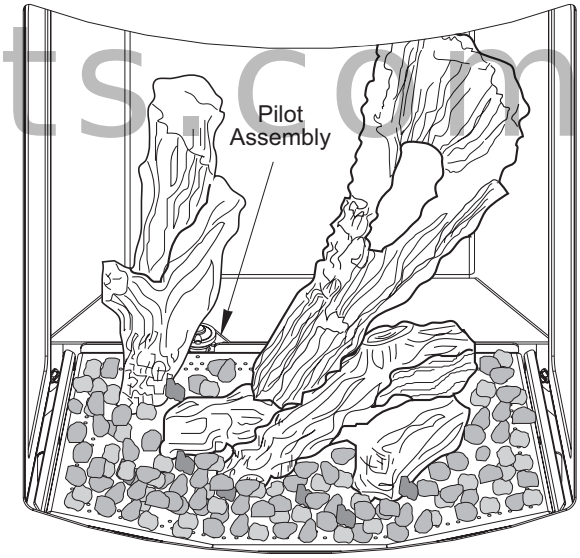

Figure 31.

Evenly disperse the Ember Stones evenly over the burner plate around the log parts. **DO NOT ALLOW EMBER STONES TO BLOCK THE PILOT ASSEMBLY AREA.** The carry-over ports directly in front of the pilot must remain clear for proper pilot ignition.

Replace the Glass Frame.

Reinstall the glass frame using the 4 mm hex key and socket head screws previously removed.

fire-parts.com

9. Exterior Decorative Glass Panel Kit Assembly

Kit Contents

1. Upper Side Brackets, 2
2. Lower Side Brackets, 2
3. Upper Front Bracket
4. Lower Front Bracket
5. Side Glass Panels, 2
6. Front Glass Panel
7. Top Glass Panel
8. Top Plate
9. 3 mm hex key
10. 4 mm hex key
11. M8 x 40mm bolts, 4
12. M6 x 20 FH screws, 4
13. Friction Buttons, 8

Use the white gloves supplied when handling glass to minimize fingerprints.

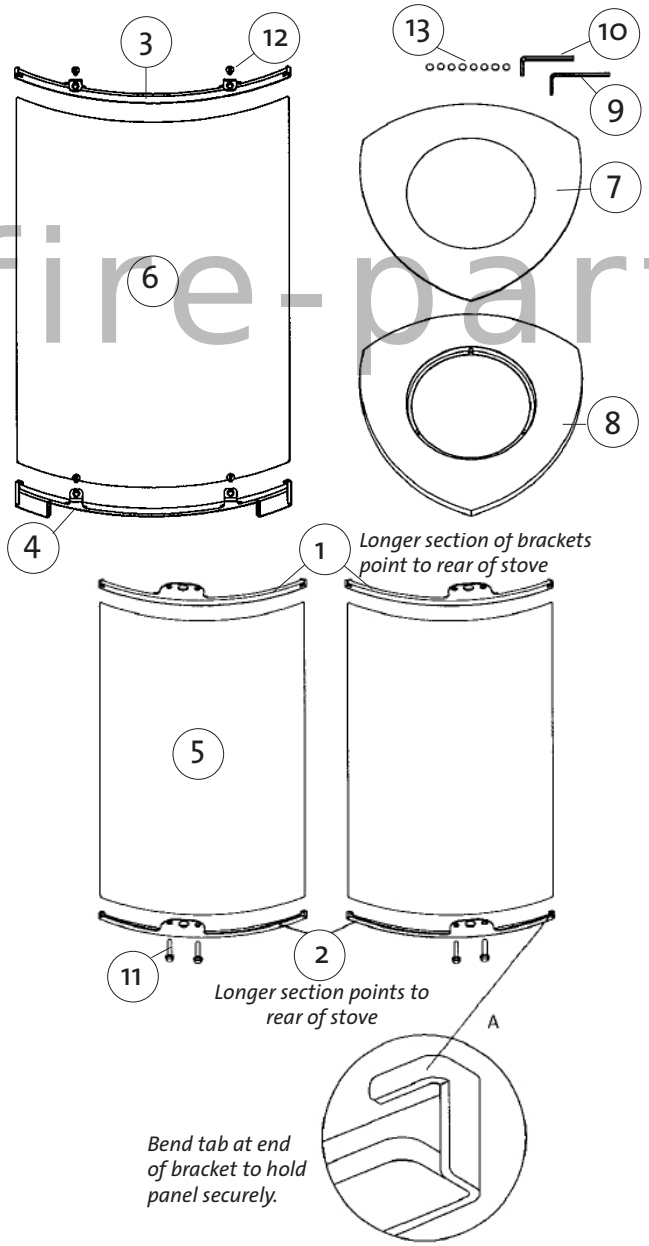

Figure 32. Exterior Decorative Glass Kit contents.

IMPORTANT!
Clean the inside surface of the glass before installation.

Before mounting the support brackets to the stove set each on the end of the glass panel and bend the bracket tabs to hold the panel securely.
See Detail A, fig. 32.

1. Remove the top plate from the stove.
2. Install the Upper Side brackets using the four M8 x 12 mm hex bolts supplied in the Miscellaneous Kit that came with the stove.

   There are two versions of the side brackets. The upper bracket to be mounted on the right side is the same as the lower bracket to be mounted on the left side. The upper bracket on the left side is the same as the lower bracket on the right side.See fig.32.
3. Remove the door handle from the door as shown in fig. 30. Attach the lower front bracket to the door using two M6 x 20 socket screws and the 4 mm hex key. Replace the door handle assembly using the #2 and #4 hole locations to move the handle forward to align with the glass panel.
4. Place the glass panel in the lower bracket and attach the upper front bracket the top of the door using the remaining M6 x 20 screws.
5. Set the new cast iron top plate in place and replace the center grate halves.
6. Place a friction button at each corner of the top plate and set the glass top plate in position.

fire-parts.com

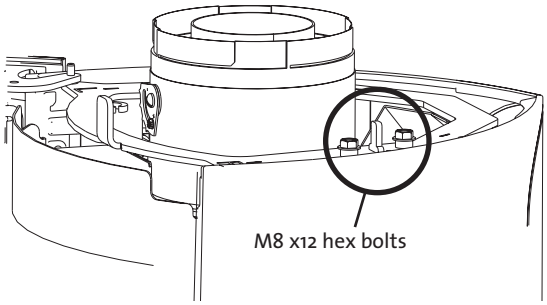

Figure 33. Upper side bracket bolt locations.

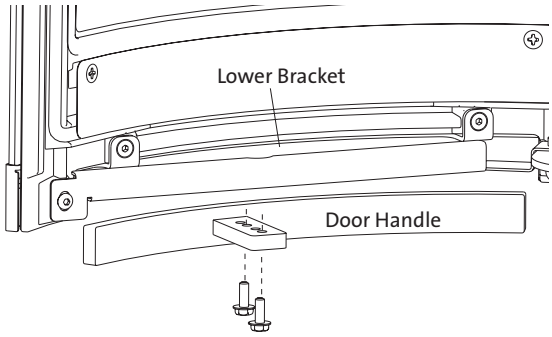

Figure 34.
Door handle after lower front bracket is installed.

10. Initial System Check

The burner and fan control system consists of the following built-in or supplied components:

1) Remote Transmitter - 3, AAA batteries preinstalled
2) Remote Receiver - 4, AA backup batteries preinstalled
3) Fan Control Module - switched

All internal connections have been made at the factory. The remote controls are preprogramed and the entire system tested.

NOTE: Check the build date on the shipping crate label. If it has been more than 6 months since the build date, be prepared to replace the Receiver and Transmitter batteries.

Follow this procedure for the initial system check following installation:

1. **Connect the power extension cord** to the interior power cord and to a 120V electrical outlet.
2. **Turn the Fan Control Module rocker switch to the ON position**, fig. 35a. It is located in the valve compartment, behind the Receiver control box.
3. **Slide the Remote Receiver switch to the ON position.** The ignitor will generate spark in either IPI or CPI pilot modes. See fig. 35b.
4. **PURGING THE GAS LINE:** Open the gas supply valve. When lighting the appliance for the first time it will take a few moments to clear the gas line of air. Once the purge is complete, the pilot light will ignite.
5. **PILOT FLAME:** The pilot flame should be steady - not lifting or floating. The flame should be blue in color around the pilot hood, with traces of yellow toward the outer edges. It is important that the pilot flame engulf the top 1/8" of the flame sensor. The pilot flame should project out of the pilot hood 1" from both ports extending to reach the burner plate ports. See fig. 36. The pilot flame can be tuned by turning the adjustment screw located on the front of the valve. See fig. 20.
6. **INSTALLER PLEASE NOTE:**
   CHECK FUNCTIONALITY. The burner, remote control and fan functions have each been tested at the factory. However, it is important to run through each function and be sure to familiarize the homeowner with the operation procedures. See the Operation section on pages 24-27 for details regarding Remote Control functions and settings.

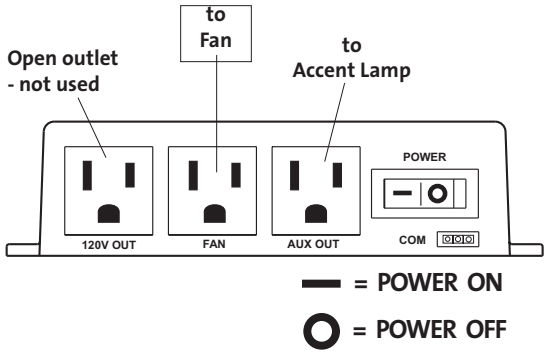

Figure 35a. Fan Control Module power switch.

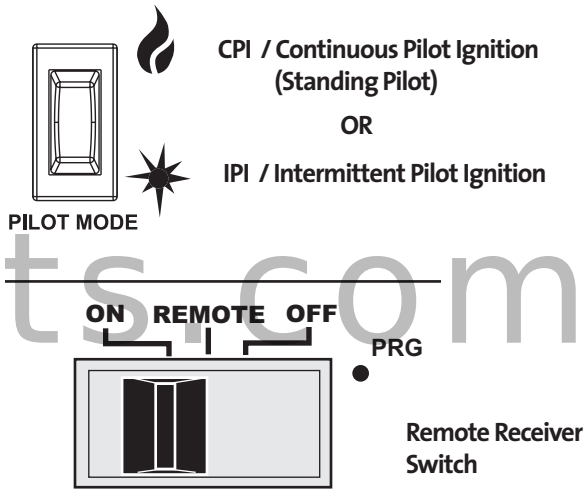

Figure 35b. Initial system settings.

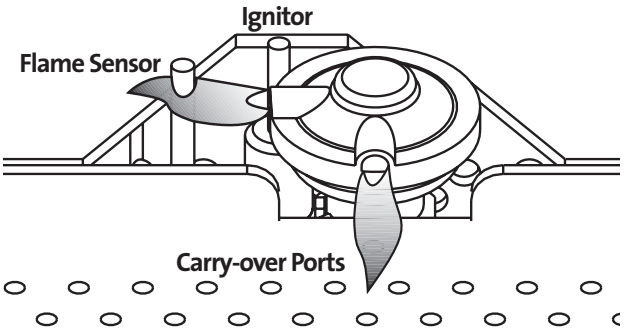

Figure 36. Correct Pilot flame pattern.

fire-parts.com

Flame Appearance / Air Shutter Adjustment

WARNING:
AIR SHUTTER ADJUSTMENTS SHOULD ONLY BE PERFORMED BY A QUALIFIED, PROFESSIONAL SERVICE TECHNICIAN.

Locate the Primary Air Shutter control under the fire-box floor above the gas valve. See fig. 37. The shutter is set at the midpoint of its adjustment range at the factory. This will give good results in the majority of installation configurations, however, you may need find it necessary to adjust it to get the best flame picture depending upon the your specific installation.

With the burner operating, loosen the wingnut on the shutter stem. Push the stem back toward the rear of the stove will decrease combustion air. Pull it forward to increase air.

Generally, flame appearance is a matter of individual preference, however a warm yellowish flame is most common.

fire-parts.com

- Closing the air shutter - in extreme cases may generate very long yellow flames resulting in soot. Sooting produces black deposits on the logs, on the inside walls of the appliance, and potentially on the exterior termination cap.

  Sooting is caused by incomplete combustion in the flames and lack of combustion air entering the air shutter opening.
- Opening the air shutter - will generate a flame that is blue and transparent, or "anemic". This flame is generally more efficient, but not as attractive.
- Allow the burner to operate at the highest setting for 20-30 minutes before making any adjustments. Always make adjustments in 1/8" increments and allow the burner to settle-in for 10- 15 minutes between additional adjustments.

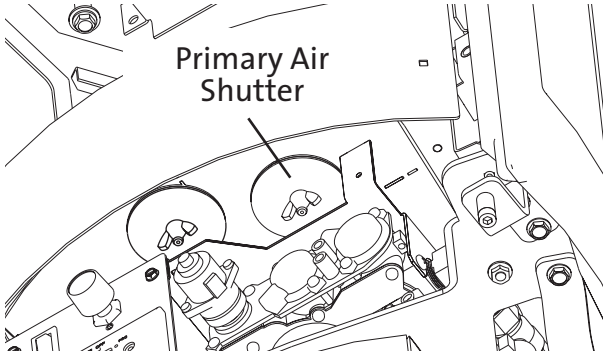

Figure 37. Primary Air Shutter location.

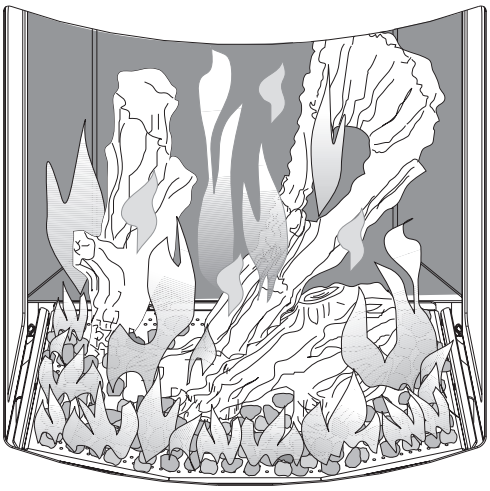

Figure 38. Proper flame picture -Traditional Logs.

Alternate flame pictures for Wishing Rock and Starfire Glass are illustrated in figs. 67 & 68 in the Appendix on page 36.

Operation Notes

1. For the first several hours of operation, it is common to detect some odor as the metal and manufacturing materials cure under heat. This condition is temporary and can be alleviated by allowing plenty of fresh air to circulate through the area.
2. Condensation may develop on the glass upon each lighting of the appliance. This "fog" will disappear as the glass heats.
3. Keep the controls and the area under the appliance free of dust. Always keep the appliance area clear and free from combustible materials, gasoline and other flammable liquids.
4. This appliance can be operated with a continuously burning pilot flame. Exercise caution when using household products containing combustible vapors.
5. **CAUTION: DO NOT OPERATE THIS APPLIANCE WITH THE GLASS REMOVED, CRACKED OR BROKEN. REPLACEMENT OF THE GLASS SHOULD BE DONE BY A LICENSED OR QUALIFIED SERVICE PERSON. USE ONLY REPLACEMENT GLASS PROVIDED BY YOUR AUTHORIZED JØTUL DEALER. NEVER USE ANY SUBSTITUTE MATERIALS.**

Jøtul GF 370 DV Operation

Features Overview

The Proflame GTMFS system is a modular remote control system that directs the functions of the Jøtul GF 370 gas freestanding unit. It is configured to control the on/off operation both manually and thermostatically, with standard and "Smart" thermostat features. It will also control flame modulation, manual flame control, fan on/off and speed and on/off of accent lighting features.

The system is an IPI system (Intermittent Pilot Ignition) and also has a built in switch which allows you to keep the pilot lit continuously if desired (CPI Constant Pilot Ignition). The power is provided to the FCM (Fan Control Module) using 120v electricity and has a 6volt DC battery back-up for operation during a power failure.

Remote Control Transmitter

This new remote system has all controls available on its face for reliable, ease of use. It gives room temperature readout, set temperature readout, all function abilities as well as childproof lockout and low battery indicator. Icons appear on the screen indicating which mode of operation you are controlling. The four button controls are easy to learn and simple to operate. The remote transmitter is powered by 3-1.5v AAA batteries.

Remote Control Receiver

The receiver is powered by 4-1.5v AA batteries. This unit has a manual on/off switch to light the burner if the remote should become inoperative.

Fan Control Module

The Fan Control Module (FCM) is the electrical heart of the system. It provides power to all components, 120v ac when available, and converts to 6v DC when it is not. This powers the receiver, making the batteries in the receiver a backup power source, thus prolonging the life of the batteries. The FCM sends power to the fan system and the accent light. When no line power is available these features will not operate.

Ignition Module

This is the brain of the system. It allows the pilot to be set up as an IPI or CPI unit. It tells the burner to light or turn off, and provides the ignitor with the electricity needed for sparking. All functional commands are routed through this part of the system and distribute the signal to the appropriate component.

Sit 885 Modulating Valve

This valve has the ability to be stepped down in six increments between high and low. It can be done manually or by setting the remote control to the Smart thermostat modulation mode. Automatic modulation means that as the room temperature approaches the limit set for shut down, the valve gradually decreases or "steps-down" the fire intensity. Conversely, as room temperature cools, the valve gradually increases flame intensity. The overall result is more comfortable even heating, minimizing temperature peaks and valleys.

Pilot Assembly

The pilot contains a pilot hood, igniter, and a sensor rod. The igniter sends a spark to the pilot hood which lights the gas. The sensor rod is then engulfed by the pilot flame, flame rectification occurs and the unit remains lit. If rectification does not occur the main burner will not light and the pilot will shut down.

fireparts.com

WARNING:

READ AND UNDERSTAND ALL OPERATING INSTRUCTIONS BEFORE ATTEMPTING TO OPERATE THIS APPLIANCE. DO NOT ALLOW ANYONE TO OPERATE THIS APPLIANCE WHO HAS NOT READ AND UNDERSTOOD THESE INSTRUCTIONS. KEEP THE REMOTE CONTROL TRANSMITTER WHERE CHILDREN CANNOT REACH IT.

WARNING:

SEVERE INJURY. THIS APPLIANCE CAN BE SET TO OPERATE THERMOSTATICALLY. BE AWARE THAT THE STOVE MAY BE VERY HOT EVEN WHEN THE BURNER IS NOT APPARENTLY OPERATING. KEEP CHILDREN AWAY FROM THE APPLIANCE.

WARNING:

OBSERVE CAUTION NEAR THE GLASS PANEL. THE GLASS MAY SHATTER IF STRUCK BY AN OBJECT. ALWAYS HANDLE THE GLASS PANEL WITH CARE.

Control Functions

Pilot Mode

In most cases you will want to operate the stove in IPI mode. This allows the most efficient use of gas, burning the pilot light only when the thermostat calls for the burner to ignite.

The CPI mode permits functional flexibility within a wide range of installation characteristics. The pilot flame remains lit when the burner is off. This is an advantage in those instances when a cold system maybe difficult to start in IPI mode. The pilot can be run until the system has warmed sufficiently for IPI operation. NOTE: THE IGNITOR WILL ALWAYS SPARK WHENEVER THE PILOT MODE IS SWITCHED TO CPI, REGARDLESS OF THE POSITION OF THE RECEIVER SWITCH.

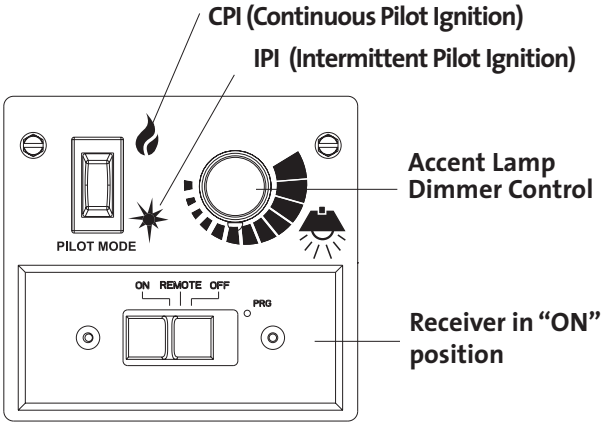

Figure 39. Main Control Panel.

Remote Receiver

The Remote Receiver is powered through the Fan Control Module. The Receiver can be set to one of three different positions. See fig. 39.

ON - this is a manual override allowing the burner to function without remote control. The ignitor will spark within 3 seconds .

REMOTE - Permits full function of all components by remote control Transmitter activity.

OFF - Disconnects communication between the transmitter and receiver. Turns off IPI functionality. Turn the Receiver to "OFF" whenever the stove will not be used and whenever service is performed.

fire-parts.com

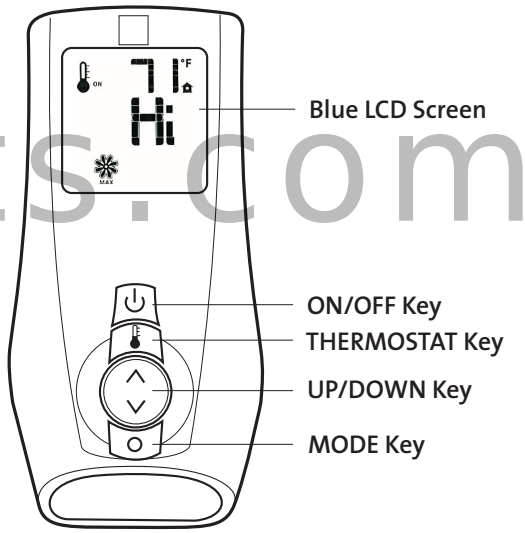

Figure 40. Remote transmitter function keys.

Remote Transmitter

The Transmitter features a simple button layout and informative display screen. See fig. 40. A bracket is included for convenient wall-mount storage.

ON / OFF Key - controls Burner, Fan, and Lamp functions.

THERMOSTAT Key - Used to set either Manual or Thermostatic Control and index through thermostatic functions.

UP / DOWN Arrow Key - Selects thermostat temperature range and fan speed.

MODE Key - used to select the component to be controlled: Burner, Fan, or Lamp.

DISPLAY - graphically indicates temperature settings and status of Thermostat, Burner, Fan, and Lamp.

Figure 41. Remote transmitter display data.

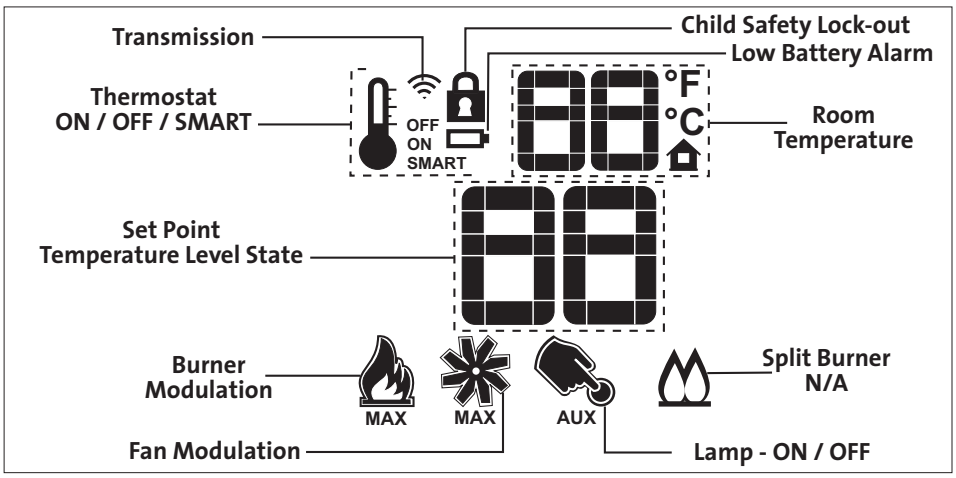

Remote Transmitter Controls, cont'd.

Temperature Indication Display

- With the transmitter in the OFF position, press the Thermostat Key and the Mode Key at the same time. The display screen will show the current room temperature cycling between Farenheit and Celsius indicators each time the keys are pressed simultaneously. See fig. 42.

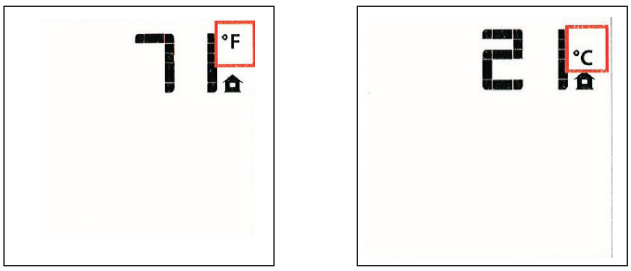

Figure 42. Room temperature readings

Turn on the Burner

- Press the ON/OFF Key on the Transmitter.

  The display will show all the active icons. At the same time, the Receiver will activate the Pilot Ignitor. First the pilot will ignite, followed shortly by the burner. A single"beep" from the Receiver will confirm reception of the command.

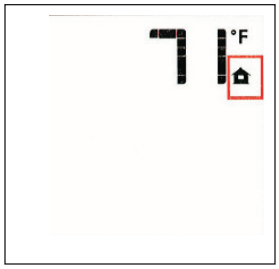

Figure 43. Burner shut-down

Turn off the Burner

- Press the ON/OFF Key. The display will show only the room temperature and icon. At the same time, the Receiver will deactivate the call for heat and the burner will shut down. Fig. 43. A single"beep" from the Receiver will confirm reception of the command.

fire-parts.com

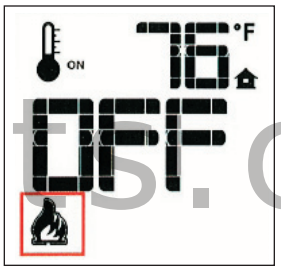

Figure 44. Burner OFF.

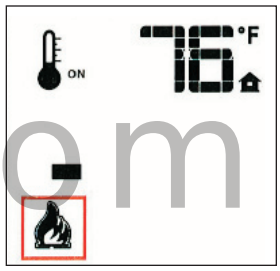

Figure 45. Flame Level 1.

Remote Burner Control

There are six flame levels available.

- With the system ON, and the burner flame level at maximum, press the Down Arrow Key once to reduce the flame height by one step. Each time the Down Key is pressed, the flame will step down until the burner is finally turned off. Fig. 44.
- The Up Arrow Key will increase the flame height each tim it is pressed. If the U Arrow Key is pressed while the system is on but the flame is off, the flame will come on in the High position. Figs. 45-47. A single "beep" will confirm reception of the command.

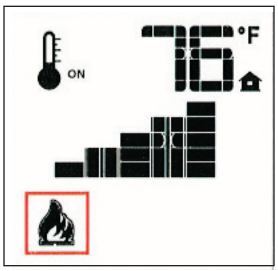

Figure 46. Flame Level 5.

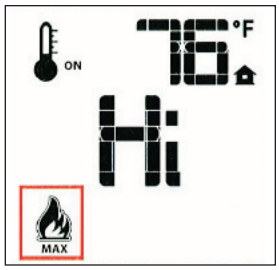

Figure 47. Flame Level 6.

Room Thermostat (Transmitter Operation)

The Remote Control can operate as a room themostat. The themostat can be set to a desired temperature to control the comfort level in a room.

- To activate this function, press the Thermostat Key, (Fig. 40.) The display will indicate that the room thermostat is "ON" and the current Set Temperature is now displayed. Fig. 48.
- To adjust the Set Temperature, press the Up or Down Arrow Keys until the desired Set Temperature is displayed. Fig.49.

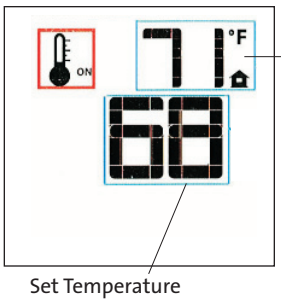

Figure 48. Thermostat ON

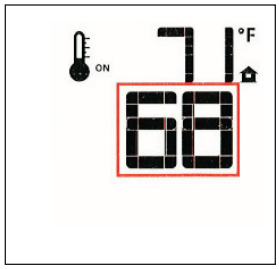

Figure 49.
Change Set Temperature

SMART Thermostat Function

This function adjusts the flame intensity according to the difference in the Set Point temperature and the actual room temperature. As the room temperature gets closer to the Set Point, the Smart Function will modulate flame intensity down.

- To activate this function, press the Thermostat Key until the woed "SMART" appears to the right of the thermometer bulb icon. Fig. 50.
- To adjust the temperature, press the Up or Down Arrow Keys until the desired Set Temperature is displayed. Fig. 51.

Fan Speed Control

- Fan speed can be adjusted through six settings. To activate this function, press the Mode Key (Fig. 40) to index to the Fan Control icon. See fig. 52.
- Use the Up/Down Arrow Keys to turn ON, OFF, or adjust the fan speed. Fig. 53. A single "beep" will confirm reception of the command.

Accent Lamp Control (Auxiliary 120V Outlet)

- The auxiliary function controls the Accent Lamp power. Press the Mode Key to index to the AUX icon. Figs. 54-55.
- Pressing the Up Arrow Key will turn the Lamp ON. Lamp brightness can be adjusted by turning the dimmer knob on the stove Control Panel.
- Pressing the Down Arrow Key will turn the Lamp OFF.

Child Safety Lock

This function will lockout the Transmitter to prevent unsupervised operation.

- To activate the Lock, press the Mode key and UP Key at the same time. Fig. 56.
- To de-activate the Lock, press the Mode Key and UP Key at the same time.

Low Battery Detection

The life-span of the batteries depends on various factors; battery quality, the frequency of ignition calls, the frequency of changes to Set Points, etc.

- When Transmitter batteries are low, the Battery icon will be displayed before all battery power is lost. The icon will disappear when new batteries are installed.
- When Receiver batteries are low, no "beep" will be emitted from the Receiver when it receives an On/Off command from the Transmitter. This is an alert for a low battery condition in the Receiver. When the batteries are replaced, the "beep" will be emitted from the Receiver when the ON/OFF Key is pressed. See Battery Replacement under the Maintenance section of this manual.

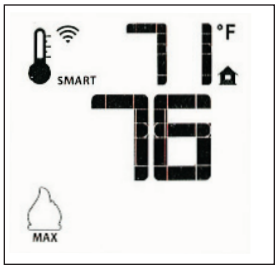

Figure 50. Smart Mode

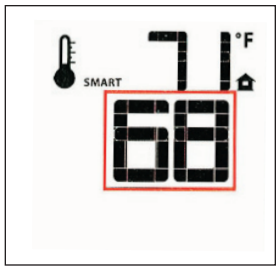

Figure 51. Smart Set Temp.

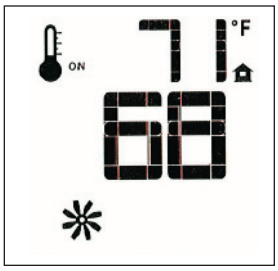

Figure 52. Fan Mode

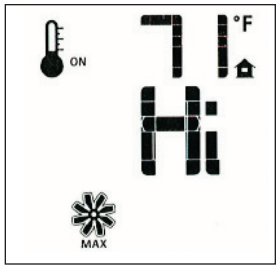

Figure 53. Fan Speed

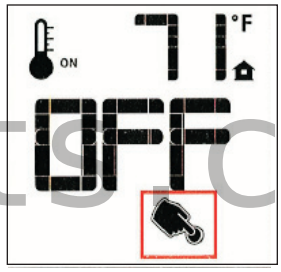

Figure 54. Lamp Control

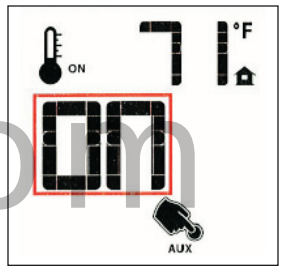

Figure 55.. Lamp ON

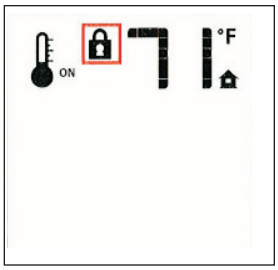

Figure 56. Lock ON

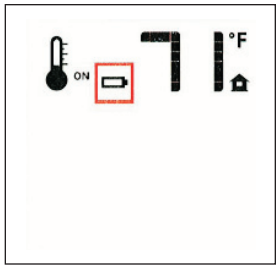

Figure 57. Low Battery

Manual By-Pass of the Remote System

When battery power is low or depleted, the burner can still be operated manually by sliding the Receiver switch to the ON position. It will immediately ignite in the High position.

In the event of a power failure, flame modulation, themostatic control, fan and lamp functions will be unavailable. It is therefore advisable to keep a supply of good quality batteries on hand.

fire-parts.com

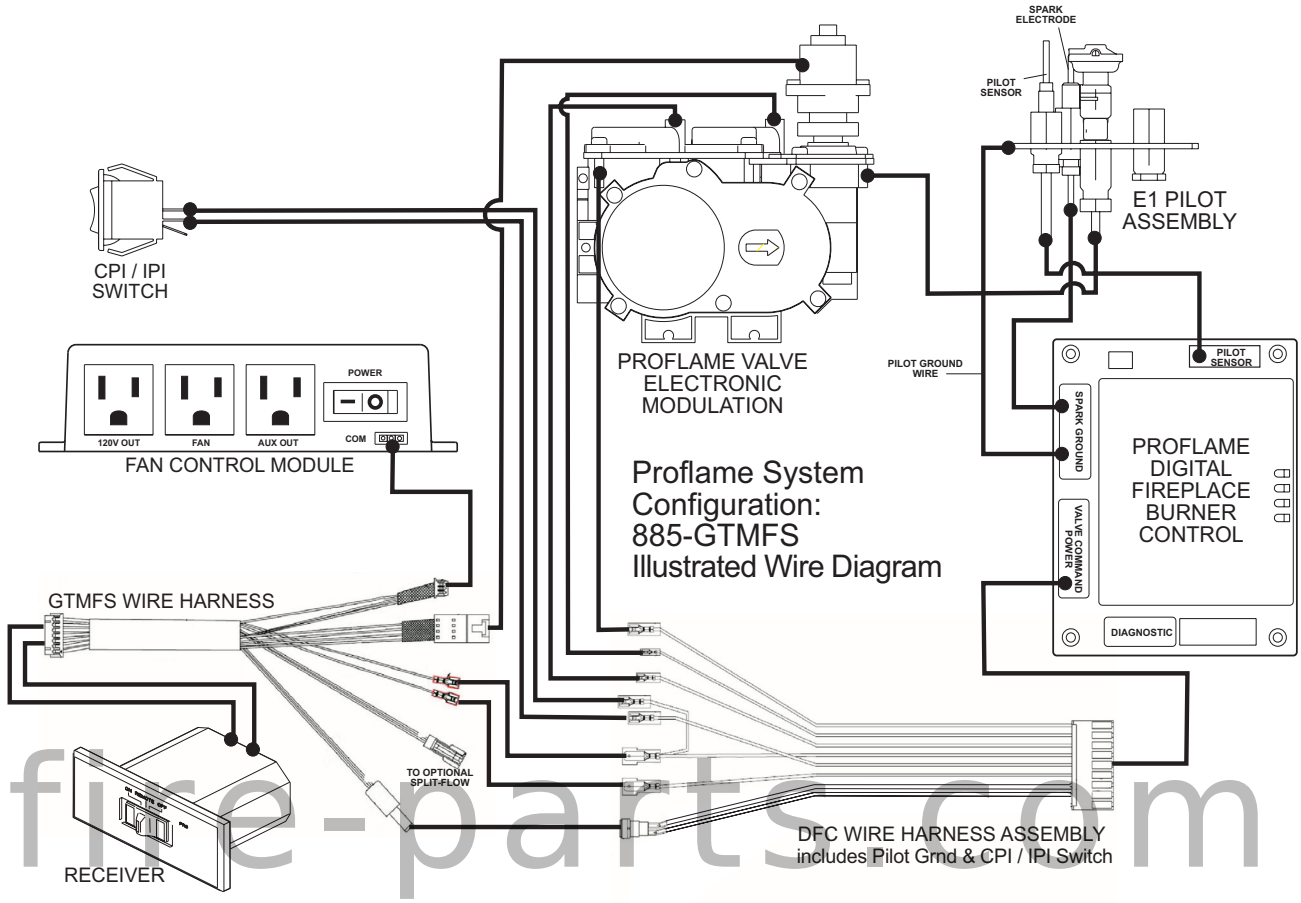

fire-parts.com

Figure 58. Wiring schematic, SIT Proflame 885 Burner Control System

Technical Data

Fan Control Module

Supply voltage/frequency: 120V, 60 Hz
Ambient temp. ratings: 32 to 140° F
Three wire bus: -Two wires provide DC voltage to the Receiver
- One wire gives uni-directional signal from the Receiver
Output voltage/frequency/current: 120V / 60 Hz / 5 A
Auxiliary switched output: 120V / 60 Hz / 2 A
Fan speed output: 120V / 60 Hz / 1 A

Remote Control Transmitter

Supply voltage: 4.5 V (three 1.5V AAA batteries)
Ambient temp. rating: 32 to 122° F
Radio frequency: 315 MHz

Receiver:

Supply voltage 6.0 V (four 1.5 AA batteries)
Ambient temp. rating: 32 to 140° F
Radio frequency: 315 MHz

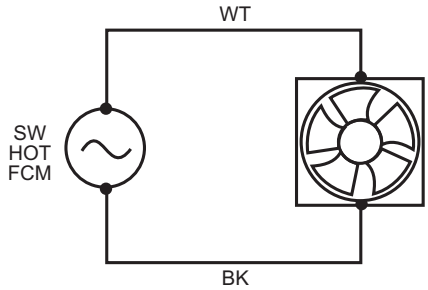

Figure 59. Wiring Diagram - GF 370 DV Fan

CAUTION: LABEL ALL WIRES PRIOR TO DISCONNECTION WHEN SERVICING THE CONTROLS. WIRING ERRORS CAN CAUSE IMPROPER AND DANGEROUS OPERATION. ALWAYS VERIFY PROPER OPERATION AFTER SERVICING THE APPLIANCE.

ATTENTION: AU MOMENT DE L'ENTRETIENDES COMMANDES, ÉTIQUETEZ TOUS LES FILS AVANT LE DÉBRANCHEMENT. DES ERREURS DE CÂBLAGE PEUVENT ENTRAÎUN FONCTIONNEMENT INADÉQUAT ET DANGEREUX.

This page is intentionally blank.

fire-parts.com

Maintenance

This appliance and its venting system should be inspected before use and at least annually by a qualified service technician.

WARNING!
THE IGNITION SYSTEM OF THIS APPLIANCE CARRIES LIVE VOLTAGE. ALWAYS TURN "OFF " THE MAIN GAS SUPPLY AND DISCONNECT THE POWER SOURCE BEFORE PERFORMING ANY MAINTENANCE PROCEDURE.

TURN "OFF " THE MAIN GAS SUPPLY AND DISCONNECT THE POWER SUPPLY TO THE APPLIANCE BEFORE REPLACING BATTERIES.

Annual Cleaning

Vent System

The entire vent system should be inspected and cleaned every year. If the intake and exhaust venting is disassembled for any reason, it should be reassembled and sealed according to the vent manufacturer's instructions provided at the initial installation.

fire-parts.com

Burner and Log Set

Periodically inspect the firebox and valve compartment to BE CERTAIN THAT THE FLOW OF COMBUSTION AND VENTILATION AIR IS UNOBSTRUCTED.

The firebox should be vacuumed at least annually to remove any surface build up. Use a soft brush attachment and handle the logs carefully as they are fragile.

Glass Care

Clean the glass as necessary. Wipe the surface with a clean, dampened, soft cloth. Follow with a dry, soft towel. Take care not to scratch the glass surface.

WARNING: DO NOT USE ABRASIVE CLEANERS ON THE GLASS. NEVER CLEAN THE GLASS WHEN IT IS HOT.

Gasket Inspection

It is important that the glass gasket be inspected at least annually. Examine the ribbon gasket for signs of deterioration and make sure the gasket has a positive seal. Replace the gasket if necessary.

FOR REPLACEMENT, USE ONLY JØTUL CERAMIC GLASS PANEL KIT 156817. DO NOT USE ANY OTHER TYPE OF GLASS WITH THIS APPLIANCE.

Glass Panel or Gasket Replacement

1. Use the 4 mm hex key to remove the four socket screws that attach the Glass Frame to the firebox.

   Remove the lower screws first and be sure to adequately support the frame against the firebox while you remove the upper screws.
2. Lay the assembly upside down on a flat surface, protecting the frame from scratches using a blanket or towel.
3. The glass panel is held in place by four retainer tabs. Use a screwdriver to carefully pry these up off the edge of the glass retaining walls. If the tabs break off, use the Tinnerman clips supplied with the replacement glass kit to secure the glass panel within the frame.
4. Remove the old gasket material.
5. Beginning at the midpoint of the upper edge, apply the new gasket around the glass panel, with the adhesive side inside and the thicker portion on the outside. DO NOT STRETCH THE GASKET MATERIAL. Trim off any excess, leaving a 1/2" overlap as shown in fig. 60.
6. Lay the glass panel within the glass frame and press the tabs back down or press the clips in place as shown in fig. 61.

Figure 60.
Gasket application,
PN 129124

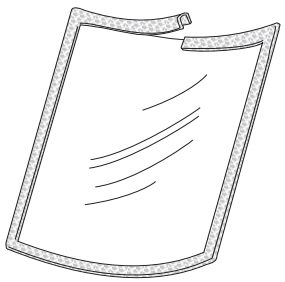

StarFire Glass Embers

NOTE: Glass embers may discolor over time, depending upon frequency of use. Clean the embers by washing in warm, soapy water, and dry thoroughly before reinstallation and use. After washing, discard any permanently hazed pieces, or replace embers annually. Colored glass embers, not supplied by Jøtul, maybe used, but must be at least 1/2" and similar in size and shape.

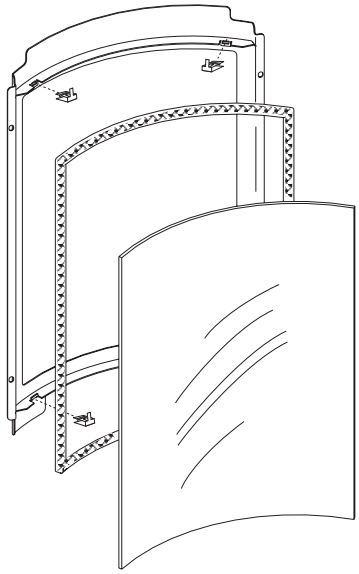

Figure 61. 156817 Glass Replacement Kit includes gasket and spare retainer clips.

Initializing the Remote Control

Each time you replace the batteries, you will need to initialize communication between the Receiver and the Transmitter.

1. Place the slider switch in the REMOTE position.
2. Insert the end of a paper clip into the hole marked PRG on the Receiver cover. The Receiver will "beep" three (3) times to indicate that it is ready to synchronize with the Transmitter.
3. Install 3 AAA batteries in the Transmitter bay and push the ON button. The Receiver will "beep" four times to indicate the Transmitter's command is accepted and sets to the particular code of that Transmitter. The system is now initialized.

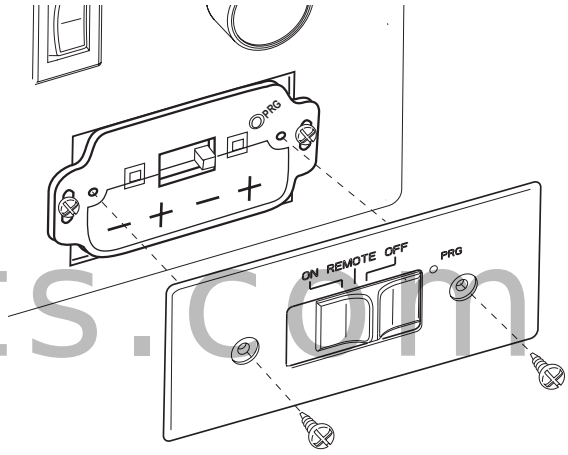

Figure 62. Access Receiver batteries.

Battery Replacement

Battery life depends on many variables; the quality of the batteries, frequency of remote use, and mode of pilot operation. Keep a supply of good quality batteries on hand to be assured of functional continuity in the event of a power failure.

The Remote Transmitter batteries are easily accessed through the tabbed cover plate. Be sure to orient the batteries for correct polarity as indicated in the battery compartment.

fire-parts.com

WARNING!

ALWAYS SHUT OFF THE GAS SUPPLY AND DISCONNECT THE POWER CORD FROM HOUSE CURRENT BEFORE REPLACING BATTERIES.

Receiver Battery Replacement

1. Push the slider switch into the OFF position. Remove the Receiver cover plate screws and pry the cover plate with slider switch off of the battery box. See fig. 62.
2. Install 4 AA batteries into the receiver bay. Note the polarity of the batteries and insert into the battery bay as indicated on the bay cover (+/-).
3. With the switch still in the OFF position, align the slider switch with the switch stem and snap the cover plate back onto the battery box.
4. Replace the Receiver cover plate screws.

Accent Lamp Replacement

Handle the replacement bulb with gloves. Skin oils will cause the bulb to fail prematurely.

1. Remove the glass frame. See fig. 18.
2. Remove the two retainer screws with a short phillips screwdriver. Pull the socket out of the housing.
3. Plug the new bulb into the socket and re-install the assembly into the lamp housing.
4. Replace the glass frame using the 4 mm hex key and socket head screws previously removed.

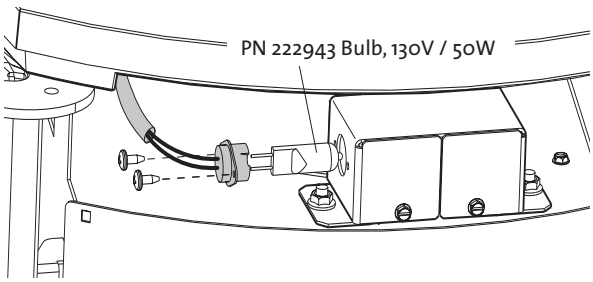

Figure 63. Accent Lamp Replacement.

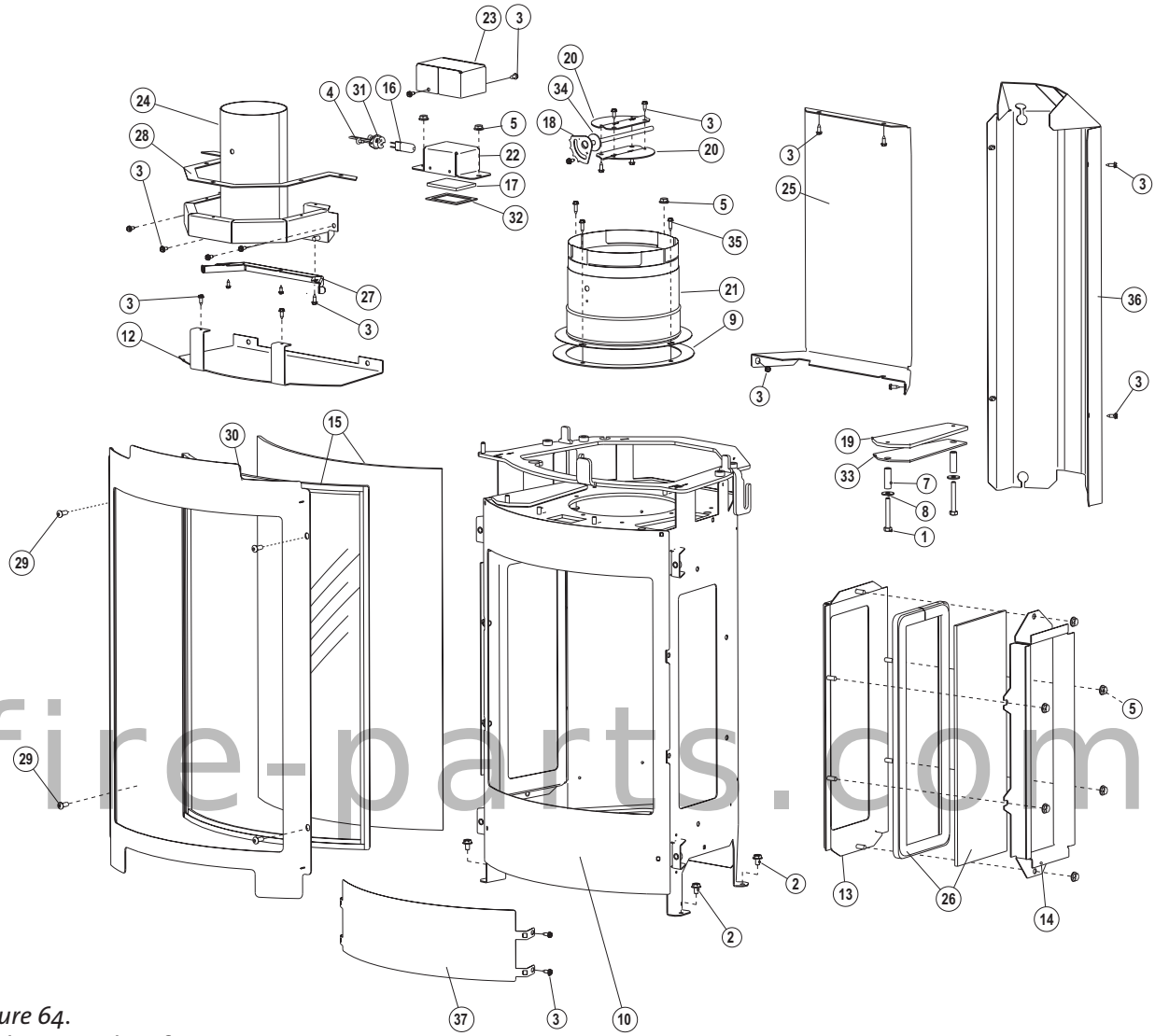

fire-parts.com

Figure 64.
Firebox Part Identification.

No.	Part Number	Description
1	9911	Bolt, Hex Cap, M6x45, DIN 933, Class 8.8, Blk
2	9962	Bolt, Hex Cap M6x10 DIN 933 8.8 Ser Flange Blk
3	117917	Screw, HWH SMA 8 x 1/2 SL Blk Oxide
4	117967	Screw, Pan Head #7 x 3/8 PH SMA Zinc
5	117968	Nut, M6 Serrated Flange plain
6	117978	Screw, Button Head Socket M6X10 Blk
7	118039	Spacer, .375 O.D. x 1.188
8	120004	Washer,Fender M6 DIN 9021B Zinc
9	129118	Gasket, Starter
10	222580	Firebox Weldment, GF 370
12	22258892	Baffle, Firebox, GF 370, MB
13	22258992	Glass Frame, Side, Inner, GF 370, MB
14	22273592	Glass Shade, Side, GF 370, MB
15	156833	Replacement Front Glass & Gasket, GF 370
16	222943	Light Bulb, 130 Volt, 50 Watt
17	222974	Glass, Ceramic, Light Fixture, GF 370
18	22298092	Restrictor, Rod & Washer Assy, GF 370, MB
19	222981	Delay Door, GF 370
20	222982	Restrictor Plate, GF 370

No.	Part Number	Description
21	22298392	Simpson DV Starter Collar, GF 370, MB
22	222988	Light Box, Inner
23	22298992	Light Box, Outer, MB
24	223202	Intake Manifold, GF 370
25	22320592	Burner Skirt, Rear, GF 370, MB
26	156834	Replacement Inner Side Glass & Gasket, GF 370
27	22324392	Panel Retainer, GF 370
28	223295	Gasket, Intake Manifold, GF 370
29	118201	Screw, Button Head Socket, M6 X 16, Blk
30	22259292	Glass Frame, Curved, GF 370, MB
31	156824	Replacement Light Socket Ass'y, GF 370
32	222977	Gasket, Light Kit
33	222993	Gasket, Relief Door, GF 370
34	223241	Gasket, Exhaust Restrictor, GF 370
35	118090	Screw, HWH SMA 8 x 5/8 SL Zinc
36	22321992	Shroud, Rear, GF 370, MB
37	22328292	Firebox Cover, GF 370, MB
38*	223224	Skamol, Rear Panel
39*	223235	Skamol, Side Panel, 2

** not illustrated*

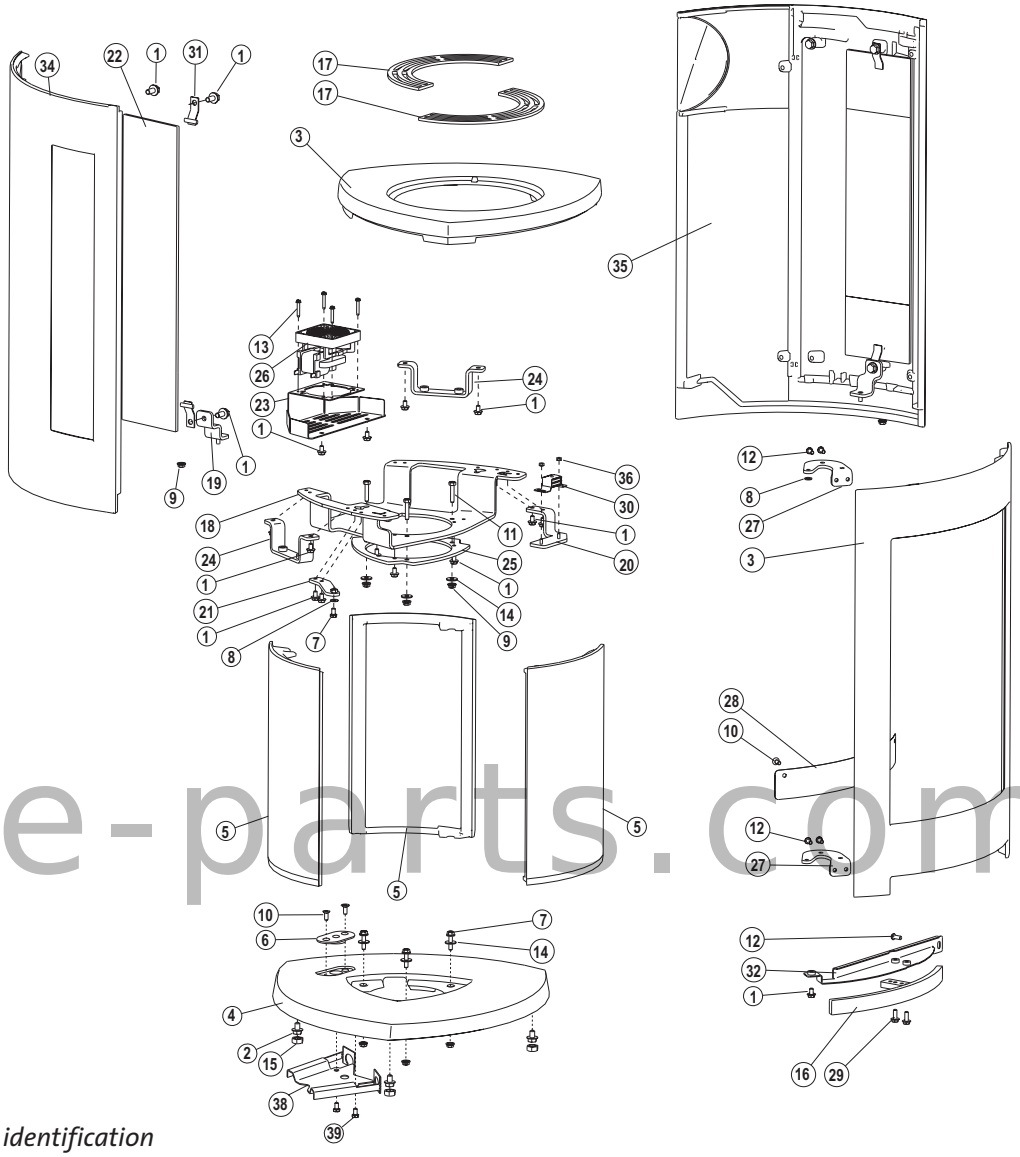

fire-parts.com

Figure 65.
External parts identification

No.	Part Number	Description
1	9962	Bolt, Hex Cap M6x10 DIN 933 8.8 Ser Flange Blk
2	99115	Bolt, Hex Head M8 x 12 Blk
3	10447092	Top Plate, MB - GF 370
4	10431992	Pedestal Base, MB - GF 370
5	10448892	Pedestal Side, MB - GF 370
6	10453692	Cover, Access, MB - GF 370
7	118019	Bolt, Hex Hd Serr Flange M6 x 25 Blk
8	117947	Washer, Flat M6 -.062 DIN 125A Plain
9	117968	Nut, M6 Serrated Flange plain
10	117976	Screw, Flat Head Phillips M6 X 12 M/S Blk
11	9906	Bolt, Hex Cap, M6x30, DIN 933, Class 8.8, Blk
12	117978	Screw, Button Head Socket M6 x 10 Blk
13	118095	Screw, HWH, SMA, #8 x 1", SL, Zinc
14	120004	Washer,Fender M6 DIN 9021B Zinc
15	222664	Protection Cap, M8 Hex, Black
16	222729	Door Handle, Plated, GF 370
17	22299592	Top Grill, GF 370, MB
18	222998	Bracket, Firebox Mount, GF 370
19	222999	Bracket, Side Support, GF 370
20	22320792	Bracket, Door Catch, GF 370, MB

No.	Part Number	Description
21	156843	Lower Door Hinge Asy. GF 370, MB
22	156835	Replacement Outer Side Glass, GF 370
23	22321692	Bracket, Blower Mount, GF 370, MB
24	22321892	Bracket, Outer Glass Kit, Lower, GF 370, MB
25	223220	Plate, Centering, GF 370
26	223227	Blower, Axial, 40 CFM, 120 V
27	22323292	Hinge, Door, MB
28	223236	Label, Caution,
29	99625	Bolt, Hex Head Serr Flange M6x16 8.8 Blk
30	223290	Latch, Magnetic
31	156837	Replacement Outer Side Glass Clip Ass'y.
32	22328592	Bracket, Handle, MB
33	10446392	Door, MB
34	10446492	Side Plate, Left, MB
35	10446592	Side Plate, Right, MB
36	118055	Kepnut, M4, Ext. Tooth Lockwasher, Stl, Zinc
37	22383292	Rear Cover, MB
38	224201	Gas Line Retainer
39	118236	Screw, M6 x 20

Figure 66. Spud Assembly parts identification

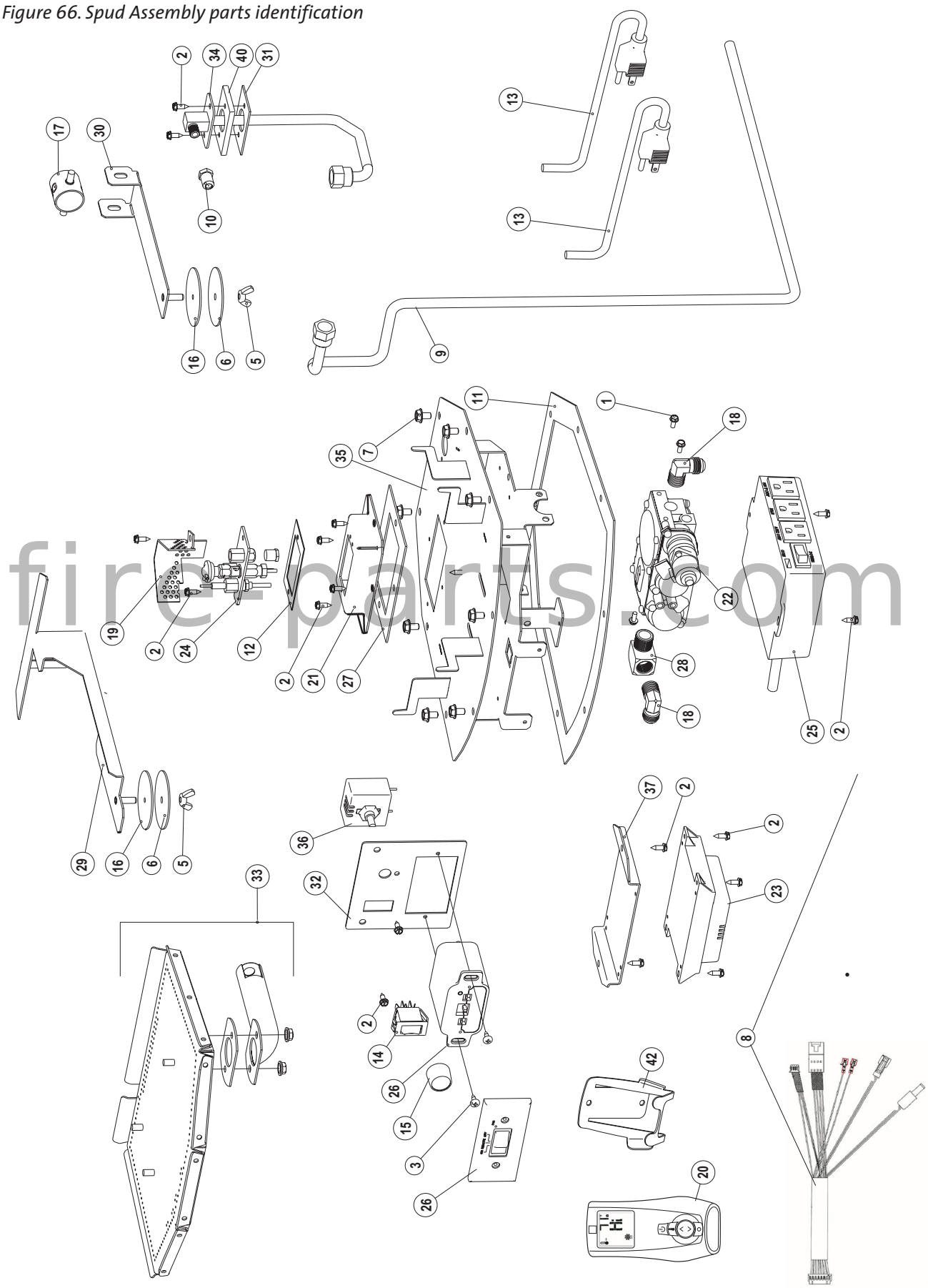

fire-parts.com

No.	Part Number	Description
1	118214	Screw, #8 X 3/8", Taptite, SLHWH, SZPL
2	117917	Screw, HWH SMA 8 x 1/2 SL Blk Oxide
3	117967	Screw, Pan Head #7 x 3/8 PH SMA Zinc
4	117968	Nut, M6 Serrated Flange plain
5	117975	Nut,Wing M6 Zinc
6	118023	Washer, Fender .250 x 2.250
7	9962	Bolt, Hex Cap M6x10 DIN 933 8.8 Ser Flange Blk
8	156813	Wire Harness, Replacement - IPI / GF 370
9	223235	Flex tube w/connectors (3/8in O.D. x 34in)
10	129130	Orifice, #38 / NG
10	220731	Orifice, #53 / LP
11	223230	Gasket, Spud Plate, GF 370
12	129670	Gasket, Pilot Assembly
13	156836	Replacement 1.5' Power Cord Ass'y, GF 370
14	120517	Switch, Rocker, SPST, Black, Plain
15	220709	Knob, Rheostat Control
16	220734	Gasket, 2.25in OD x .125
17	221390	Primary Air Shutter Asby
18	222292	Elbow, 90 deg, Brass 3/8 NTP X 3/8" Dia Tube
19	223204	Pilot Air Deflector, GF 370
20	222926	Proflame GTMFS Transmitter
21	222910	Spacer, Pilot, GF 370
22	157410	Proflame Valve w/Stepper Motor, NG only
22	157411	Proflame Valve w/Stepper Motor, LP only
23	222924	Proflame IPI Ignition Board
24	222925	Replacement Proflame Pilot, NG
24	156803	Replacement Proflame Pilot, LP
25	157026	Proflame Fan Control Module, Replacement
26	222928	Proflame S Receiver
27	222911	Gasket, Pilot Spacer, GF 370
28	222941	Elbow, Brass, Street, 90 deg, 3/8 NTP
29	222987	Intake Restrictor, GF 370
30	223201	Handle, Primary Air, GF 370
31	222280	Gasket, Drop In Orifice Holder
32	223246	Control Face Plate, Silkscreened, GF 370
33	156812	Burner Assembly, Complete / GF 370
34	223231	Orifice Holder, Drop In Assembly, GF 370
35	223233	Spud Plate Weldment, GF 370
36	156823	Replacement Light Dimmer, GF 370
37	223244	Bracket, IPI Ignition Board
38	156825	Replacement Spud Ass'y, GF 370, NG, 30%TD
	156838	Replacement Spud Ass'y, GF 370, LP, 30%TD
39*	222058	Pilot Orifice, Pop-top #62 / NG
	129473	Pilot Orifice, Pop-top #35 / LP
40	224132	Spacer, Orifice Holder
41	224201	Gas Line Retainer
42	223951	Remote Transmitter Wall-mount Bracket

**Not illustrated*

Use only genuine Jøtul Replacement Parts available from your local Authorized Jøtul Dealer or by contacting:

Jøtul North America
55 Hutcherson Dr.
Gorham, ME 04038

207 591-6601

fire-parts.com

Appendix A

Mobile Home Installation

The Jøtul GF 370 DV can be installed for use in a mobile home in the U.S. and Canada provided:

1. The stove must be secured to the floor of the mobile home. There is a hole for this purpose, located in the pedestal base, through which a lag screw or other appropriate fastener should be secured to the floor. See Fig. 1, page 3.
2. The stove is installed in accordance with Title 24 CFR, Part 3280- Manufactured Home Construction and Safety Standard, in the U.S. Comply with CSA Z240.4, Gas Equipped Recreational Vehicles and Mobile Housing, in Canada.
3. Always contact your local officials about installation restrictions and requirements in your area.

firepparts.com

THIS APPLIANCE MAY BE INSTALLED AS AN OEM INSTALLATION IN A MANUFACTURED (MOBILE) HOME AND MUST BE INSTALLED IN ACCORDANCE WITH THE MANUFACTURER'S INSTRUCTIONS AND THE MANUFACTURED HOME CONSTRUCTION AND SAFETY STANDARD, TITLE 24 CFR, PART 3280, STANDARD FOR MANUFACTURED HOME INSTALLATION, ANSI/NCBCS A255.1 OR STANDARD FOR CANADA, CSA Z240.4. THIS APPLIANCE IS ONLY FOR USE WITH THE TYPE OF GAS THAT IS INDICATED ON THE STOVE'S RATING PLATE. THIS APPLIANCE MAY BE INSTALLED IN AN AFTERMARKET PERMANENTLY LOCATED, MANUFACTURED (MOBILE) HOME, WHERE NOT PROHIBITED BY LOCAL CODE.

CET APPAREIL PEUT ETRE INSTALLE DANS UN MAISON PREFABRIQUEE (MOBILE) DEJA INSTALLEE A DEMEURE SI LES REGLEMENTS LOCAUX LE PERMETTENT.

CET APPAREIL DOIT ETRE UTILISE UNIQUEMENT AVEC LES TYPES DE GAS INDIQUES SUR LA PLAQUE SIGNALETIQUE. NE PAS L'UTILISER AVEC D'AUTRES GAS SAUF SI UN KITDE CONVERSION CERTIFIE EST INSTALLE.

Correct Flame Pictures

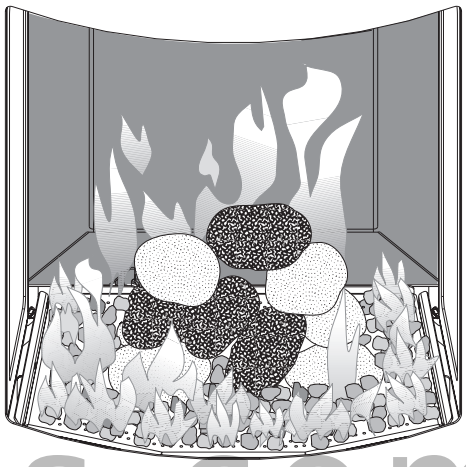

Figure 67. River Rock flame picture. KEEP EMBER STONES OFF PILOT CARRY-OVER PORTS.

Figure 68. Starfire Glass flame picture.

Jøtul Gas Product Limited Warranty

This warranty policy applies to gas products identified by Jøtul, Scan, and Atra trade names, as set forth below.

A. Cast Iron, Steel Doors, Surround Components, Firebox:

Jøtul North America Inc. (JØTUL) warrants, to the original retail purchaser, that those components of the Jøtul, Scan, or Atra Gas Stove or Fireplace specified above will be free of defects in material and workmanship for a period of five (5) years from the date of purchase. This warranty is subject to the terms, exclusions and limitations set forth in the following text.

B. Burner, Burner Treatments, Firebox Panels:

JØTUL warrants, to the original retail purchaser, that those components of the Jøtul, Scan, or Atra Gas Stove or Fireplace specified above will be free of defects in material and workmanship for a period of two (2) years from the date of purchase. This warranty is subject to the terms, exclusions, and limitations set forth in the following text

C. Gas & Electrical Components (controls, plumbing, valve, blower):

JØTUL warrants, to the original retail purchaser, that those components of the Jøtul, Scan, or Atra Gas Stove or Fireplace specified above will be free of defects in material and workmanship for a period of one (1) year from the date of purchase. This warranty is subject to the terms, exclusions, and limitations set forth in the following text.

fireparts.com

JØTUL will repair or replace (including parts & labor), at its option, any of the above components determined by JØTUL to be covered by this warranty. You must, at your own expense, arrange to deliver or ship the component to an authorized Jøtul, Scan, or Atra dealer and arrange for pickup or delivery of the component after repairs have been made. If, upon inspection, JØTUL determines that the component is covered by this warranty, the repair or replacement will be made as set forth above. This warranty is not transferable and is extended only to, and is solely for the benefit of, the original retail purchaser of the Jøtul, Scan, or Atra Gas Stove or Fireplace. This paragraph sets forth the sole remedy available under this warranty in the event of any defect in the Jøtul, Scan, or Atra Gas Stove or Fireplace.

The warranty period for any replaced component will be the remaining unexpired portion of the warranty period for the original component.

Please retain your dated sales receipt in your records as proof of purchase.

EXCLUSIONS AND LIMITATIONS

NOTICE: This warranty is void if installation or service is performed by someone other than an authorized installer, service agency or gas supplier, or if installation is not in conformance with the installation and operating instructions contained in this owner's manual or local and/or national fire and building regulations. A listing of local authorized installers, service agencies and gas suppliers can be obtained from the National Fireplace Institute at http://www.nficertified.org/.

This warranty does not cover the following:

1) Repair or replacement of parts that are subject to normal wear and tear during the warranty period or to parts that may require replacement in connection with normal maintenance. These parts include gaskets and glass (except to the extent such parts suffer damage from thermal stress).

2) Damage due to incorrect installations not in conformance with the installation instructions contained in this owner's manual or local and/or national fire and building regulations.

3) Damage due to service performed by an installer, service agency or gas supplier, unless otherwise agreed to in writing by JØTUL.

4) Labor or other costs associated with the repair of gas controls, plumbing, burners, log set, or sheet metal firebox beyond the warranty period.

5) Damage caused by unauthorized modification, use or repair.

6) Damage to enameled surfaces caused by improper operation or misuse, including use that is not in conformance with the operating instructions contained in this owner's manual. Such damage can typically be identified by bubbling, cracking, or discoloration of the enamel finish.

7) Costs incurred by travel time and/or loss of service.

8) Damage incurred while the Jøtul, Scan, or Atra Gas Stove or Fireplace is in transit.

IN NO EVENT SHALL JØTUL, ITS PARENT COMPANY, SHAREHOLDERS, AFFILIATES, OFFICERS, EMPLOYEES, AGENTS OR REPRESENTATIVES BE LIABLE OR RESPONSIBLE TO YOU FOR ANY SPECIAL, INDIRECT, INCIDENTAL, CONSEQUENTIAL, PUNITIVE OR OTHER SIMILAR DAMAGES, INCLUDING, BUT NOT LIMITED TO, LOST PROFITS, LOST SALES, INJURY TO PERSON OR PROPERTY, OR DAMAGES TO A STRUCTURE OR ITS CONTENTS, ARISING UNDER ANY THEORY OF LAW WHATSOEVER. ALL IMPLIED WARRANTIES, INCLUDING THE IMPLIED WARRANTIES OF MERCHANTABILITY AND FITNESS FOR A PARTICULAR PURPOSE, OR OTHERWISE, ARE LIMITED IN DURATION TO THE LENGTH OF THIS WRITTEN WARRANTY. EXCEPT AS EXPRESSLY SET FORTH HEREIN, JØTUL MAKES NO ORAL, WRITTEN OR OTHER WARRANTY WITH RESPECT TO JØTUL, SCAN OR ATRA GAS STOVES OR FIREPLACES.

Some states do not allow the exclusion or limitation of incidental or consequential damages, or limitations on the length of implied warranties. Therefore, the above exclusions or limitations may not apply to you. This warranty gives you specific legal rights, and you may have other rights, which vary from state to state.

JØTUL reserves the right to discontinue, modify or change the materials used to produce the Jøtul, Scan, or Atra Gas Stove or Fireplace. JØTUL shall have the right to replace any defective component with substitute components determined by JØTUL to be of substantially equal quality and price.

The dollar value of JØTUL's liability for breach of this warranty shall be limited exclusively to the cost of furnishing a replacement component. JØTUL shall not in any event be liable for the cost of labor expended by others in connection with any defective component. Any costs or expenses beyond those expressly assumed by JØTUL under the terms of this warranty shall be the sole responsibility of the owner(s) of the Jøtul, Scan, or Atra Gas Stove or Fireplace.

No dealer, distributor, or other person is authorized to modify, augment, or extend this limited warranty on behalf of JØTUL. NO MODIFICATION OR CHANGE TO THIS WARRANTY WILL BE EFFECTIVE UNLESS IT IS MADE IN A WRITTEN DOCUMENT MANUALLY SIGNED BY AN AUTHORIZED OFFICER OF JØTUL.

An authorized installer may have been provided with certain information related particularly to the Jøtul, Scan, or Atra Gas Stove or Fireplace; however, no authorized installer or other person who may service the appliance is an agent of JØTUL. No inference should be made that JØTUL has tested, certified, or otherwise pronounced any person as qualified to install or service the appliance. JØTUL shall not be liable or otherwise responsible for any error or omission by a person installing or servicing a Jøtul, Scan, or Atra Gas Stove or Fireplace.

If you believe your Jøtul, Scan, or Atra Gas Stove or Fireplace is defective, you should contact your nearest authorized Jøtul, Scan, or Atra dealer, who will process a warranty claim. IN ORDER TO QUALIFY FOR WARRANTY COVERAGE, JØTUL MUST RECEIVE NOTICE OF A POSSIBLE DEFECT WITHIN SIXTY (60) DAYS OF THE DATE THE DEFECT IS FIRST DISCOVERED, OR REASONABLY COULD HAVE BEEN DISCOVERED.

This warranty is given by Jøtul North America, Inc.,

55 Hutcherson Drive, Gorham, Maine 04038 USA

Your stove has a unique serial number stamped on the rating plate which is located in the valve compartment. Please record the serial number in the space below. You may also wish to attach your purchase receipt to this page for future reference.

MODEL NAME: Jøtul GF 370 DV Gas Stove

SERIAL NUMBER:_____

PURCHASE DATE: _____

AUTHORIZED DEALER:_____

ADDRESS _____

PHONE: _____

INSTALLER:_____

FUEL TYPE:_____

FUEL CONVERSION: NO_____ YES_____

NOTES:_____

_____

_____

_____

_____

_____

_____

_____

_____

_____

fire-parts.com

LIGHTING INSTRUCTIONS

FOR YOUR SAFETY, READ BEFORE LIGHTING.

WARNING:
IF YOU DO NOT FOLLOW THESE INSTRUCTIONS EXACTLY, A FIRE OR EXPLOSION MAY RESULT CAUSING PROPERTY DAMAGE, PERSONAL INJURY, OR LOSS OF LIFE.

A. This appliance is equipped with an ignition device which automatically lights the pilot. Do not try to light the pilot by hand.

B. BEFORE LIGHTING, smell all around the appliance area for gas. Be sure to smell next to the floor because some gas is heavier than air and will settle to the floor.

WHAT TO DO IF YOU SMELL GAS:
- Extinguish any open flame.
- Open windows.
- Do not light any appliance.
- Do not touch any electrical switches.
- Do not use any phone in your building.
- Immediately call your gas supplier from a neighbor's phone.
- If your gas supplier cannot be reached, call the fire department.

C. Use only your hand to push in or turn the gas control knob. Never use tools. If the knob will not push in or turn by hand, do not try to repair it. Call a qualified technician. Force or attempted repair may result in a fire or explosion.

D. Do not use this appliance if any part has been under water. Immediately call a qualified service technician to inspect the appliance and to replace any part of the control system and any gas control which has been under water.

LIGHTING INSTRUCTIONS

fire-parts.com

1. STOP! Read the safety information above.
2. Set the thermostat to the lowest setting.
3. Set the Mode Control Switch to the "OFF" position.
4. This appliance is equipped with an ignition device which automatically lights the pilot. **Do not try to light the pilot by hand.**

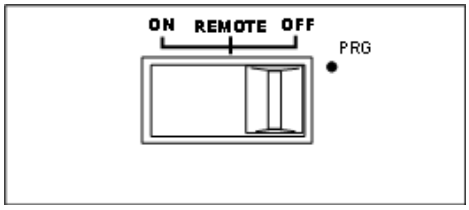

REMOTE RECEIVER MODE CONTROL SWITCH

5. Wait five (5) minutes to clear out any gas. Then, smell for gas, including near the floor. If you smell gas, STOP! Follow "B" in the safety information above on this label. If you do not smell gas, go to the next step.
6. Set the Mode Control Switch to the "ON" position. The pilot will light.
7. Set the Mode Control Switch to the "REMOTE" position.

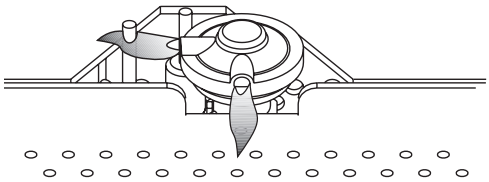

PILOT LIGHT ASSEMBLY

8. Set the thermostat to the desired setting to light the burner.

   If the appliance will not operate, follow the instructions" To Turn Off Gas To Appliance", and call your service technician or gas supplier.

TO TURN OFF GAS TO THE APPLIANCE:

1. Set the thermostat to the lowest setting.
2. Turn off all electrical power to the appliance if service is to be performed.
3. Set the Mode Control Switch to the "OFF" position.
4. Close control access door.

August, 2012
138914-Q

This appliance must be installed in conformance with local and national building regulations. Before beginning the installation, it is important that the these instructions be carefully read and understood. Jøtul maintains a policy of continual product development. Consequently, products may differ in specification, color or type of accessories from those illustrated or described in various publications.

Jøtul vise sans cesse a ameliorer ses produits. C'est pourquoi, il se reserve le droit de modifier les specifications, couleurs etequipement sans avis prelable.

fire-parts.com

Jøtul AS
P.O. Box 1411
N-1602 Fredrikstad
Norway

Jøtul North America
55 Hutcherson Dr.
Gorham, ME 04038-2634

JØTUL®