WARRANTY REGISTRATION
enviro.com/warranty

M55C-FS-2

FREE-STANDING PELLET STOVE

OWNER'S MANUAL

PLEASE READ THIS ENTIRE MANUAL BEFORE INSTALLATION AND USE OF THIS PELLET-BURNING ROOM HEATER. FAILURE TO FOLLOW THESE INSTRUCTIONS COULD RESULT IN PROPERTY DAMAGE, BODILY INJURY OR EVEN DEATH.

Contact your building or fire officials about restrictions and installation inspection requirements in your area.

Intertek
C# 4001609

Version Française: www.enviro.com/fr.html

50-2100

Table of Contents

Introduction....3
- Rating Label Location....3
- Fuel Quality....3

Efficiencies and Emissions....4
Safety Warnings & Recommendations....5
Operating Instructions....7
- Dimensions & Specifications....7
- Control Board Functions....8
- Automatic Safety Features of Your Pellet Stove....8
- Operating Your Pellet Stove....8
- Turning Your Pellet Stove Off....10
- Slider/Damper Set-Up....10

Routine Cleaning and Maintenance....11
Installation Instructions....14
- Deciding Where to Locate Your Pellet Appliance....15
- Removing Pellet Stove From Pallet....15
- Clearances to Combustibles....16
- Levelling Leg Adjustment....16
- Thermostat Installation....16
- Vent Termination Requirements....17
- Outside Fresh-Air Connection....18
- Exhaust and Fresh Air Intake Locations....18
- Mobile Home Installation....19
- Corner Through Wall Installation....19
- Horizontal Exhaust Through Wall Installation....20
- RECOMMENDED - Through Wall With Vertical Rise and Horizontal Termination Installation....21
- Through Concrete Wall with Veritcal Rise Installation....21
- Outside Vertical Installation....22
- Inside Vertical Installation....23

Hearth Mount Installation....24
Top Vent Adaptor Kit....25
Troubleshooting....26
Wiring Diagram....29
Parts List....30
Parts Diagram - Components....32
Parts Diagram - Cast....33
Notes....34
Warranty....35
Installation Data Sheet....36

Introduction

Rating Label Location:

The rating label is located on the inside of the rear hopper access cover.

Fuel Quality:

Fuel quality is important, please read the following:

Your Enviro pellet stove has been designed to burn ¼" (6mm) dia wood pellets and other organic fuels. DO NOT use this appliance as an incinerator. DO NOT use unsuitable and non recommended fuels, including liquid fuels as this will void any warranties stated in this manual.

The performance of your pellet stove is greatly affected by the type and quality of fuel being burned. As the heat output of various quality fuels differs, so will the performance and heat output of the pellet stove.

CAUTION: It is important to select and use only fuel that are dry and free of dirt or any impurities such as high salt content. Dirty fuel will adversely affect the operation and performance of the unit and will void the warranty. The Pellet Fuel Industries (P.F.I.) has established standards for wood pellet manufacturers. We recommend the use of pellets that meet or exceed these standards. Ask your dealer for a recommended pellet type.

ASH: The ash content of the fuel and operation of your stove will directly determine the frequency of cleaning. The use of high ash fuels may result in the stove needing to be cleaned daily. A low ash fuel may allow longer intervals between cleaning.

CLINKERING: [clinkers are silica (sand) or other impurities in the fuel that will form a hard mass during the burning process]. This hard mass will block the air flow through the Burn Pot Liner and affect the performance of the stove. Any fuel, even approved types, may clinker. Check the Burn-Pot Liner daily to ensure that the holes are not blocked with clinkers. If they become blocked, remove the liner (when the unit is cold) and clean/scrape the clinkers out. Clean the holes with a small pointed object if required. Refer to the section Routine Cleaning and Maintenance.

FUEL FEED RATES: Due to different fuel densities and sizes, fuel feed rates may vary. This may require an adjustment to the slider damper setting or to the auger feed trim setting.

Since Sherwood Industries Ltd. has no control over the quality of fuel that you use, we assume no liability for your choice in fuels.

FILLING FUEL HOPPER: Open lid on top of unit, check hopper for foreign objects, empty the bag into the hopper, and ensure hopper lid closes completely.

Store fuels in a dry location at least 36" (1 m) away from the pellet stove, and clear of the space required for charging and ash removal.

WARNING: Parts of the appliance, especially the external surfaces, will be hot to touch when in operation so use due care.

FLAMMABLE LIQUIDS: Never use gasoline, gasoline-type lantern fuel, kerosene, charcoal lighter fluid, or similar liquids to start or "freshen up" a fire in the heater. Keep all such liquids well away from the heater while it is in use.

Emissions and Efficiencies

Emissions and Efficiency:

Rates: This manual describes the installation and operation of the Enviro M55 pellet heater. This heater is U.S. ENVIRONMENTAL PROTECTION AGENCY Certified to comply with 2020 particulate emission standards. Under specific test conditions this heater has been shown to deliver heat at rates ranging from 38,437-7817 Btu/hr.

Efficiency: 78.2% HHV (PFS TECO 21-703)
*When using optional top vent adapter kit.

WARNING: This pellet heater needs periodic inspection and repair for proper operation. It is against federal regulations to operate this pellet heater in a manner inconsistent with operating instructions in this manual.

WARNING: This wood pellet has a manufacturer set minimum low burn rate that must not be altered. It is against federal regulations to alter this setting or otherwise operate this pellet heater in a manner inconsistent with operating instructions in this manual.

Safety Warnings & Recommendations

Please read this entire Owner's Manual before installing or operating your Enviro Pellet Stove. Failure to follow these instructions may result in property damage, bodily injury or even death. Any unauthorized modification of the appliance or use of replacement parts not recommended by the manufacturer is prohibited. All national and local regulations and shall be complied with when operating this appliance.

Caution: Do not connect to any air distribution duct or system.

Warning: Never place wood, paper, furniture, drapes or other combustible materials within 48" (122cm) of the front of the unit, 12" (30.5cm) from each side, and 4" (10cm) from the back of the unit. Do not let children or pets touch it when it is hot.

To prevent the possibility of a fire, ensure that the appliance is properly installed by adhering to the installation instructions. An Enviro dealer will be happy to assist you in obtaining information with regards to your local building codes and installation restrictions.

FIRE EXTINGUISHER AND SMOKE DETECTION: All homes with a pellet burning stove should have at least one fire extinguisher in a central location known to all in the household. Smoke detectors and carbon monoxide detectors should be installed and maintained in the room containing the stove. If either sounds the alarm, correct the cause but do not deactivate. You may choose to relocate the detection devises within the room; DO NOT REMOVE THE SMOKE OR CARBON MONOXIDE DETECTORS FROM THE ROOM.

CHIMNEY OR RUN AWAY FIRE (SOOT/CREOSOTE): Call local fire department (or dial 911). Close the draft fully. Extinguish the fire in the burn pot liner with a cup of water and close the door. Examine the flue pipes, chimney, attic, and roof of the house, to see if any part has become hot enough to catch fire. If necessary, spray with fire extinguisher or water from the garden hose. IMPORTANT: Do not operate the stove again until you are certain the chimney and its lining have not been damaged. Check daily for creosote build-up until experience shows how often you need to clean to be safe.

OPERATION: The door and ash drawer must be kept closed when the unit is in operation to prevent fume spillage and for proper and safe operation of the pellet stove. Also ensure all gaskets on the door are checked and replaced when necessary. **Unit hot while in operation. Keep children, clothing and furniture away. Contact may cause skin burns.**

CAUTION: When operating during adverse weather, if the unit exhibits dramatic changes in combustion stop using the unit immediately.

FUEL: This stove is designed and approved to only burn wood pellets of any quality, corn, wheat, barley, and grass. Dirty fuel will adversely affect the operation and performance of the unit and may void the warranty. Check with your dealer for fuel recommendations. **THE USE OF CORDWOOD IS PROHIBITED BY LAW. Do not burn garbage or flammable fluids such as gasoline, naphtha or engine oil.**

SOOT/CREOSOTE: Operation of the stove with insufficient combustion air will result in the formation of soot/creosote which will collect on the glass, the heat exchanger, the exhaust vent system, and may stain the outside of the house. Frequently check your stove and and adjust the combustion air trim and/or if necessary adjust the slider/damper as needed to ensure proper combustion. **See: "Slider/Damper Setting".**

CLEANING: There will be some build up of fly ash and small amounts of creosote in the exhaust. This will vary due to the ash content of the fuel used and the operation of the stove. It is advisable to inspect and clean the exhaust vent semi-annually or every two tons of pellets. The appliance, flue gas connector and the chimney flue require regular cleaning. Check them for blockage prior to re-lighting after a prolonged shut down period. If a significant layer of creosote has accumulated in the flue (3mm or more) it should be removed to reduce the risk of a chimney fire.

ASHES: Disposed ashes should be placed in a metal container with a tight fitting lid. The closed container of ashes should be on a non-combustible surface, well away from all combustible materials pending final disposal. If the ashes are disposed of by burial in soil or otherwise locally dispensed, they should be retained in the closed container until all cinders have thoroughly cooled.

Safety Warnings & Recommendations

ELECTRICAL: The use of a surge protected power bar is recommended. The unit must be grounded. The grounded electrical cord should be connected to a standard 110-120 volts (4.2 Amps), 60 hertz electrical outlet and also must be accessible. If this power cord should become damaged, a replacement power cord must be purchased from the manufacturer or a qualified Enviro dealer. Be careful that the electrical cord is not trapped under the appliance and that it is clear of any hot surfaces or sharp edges. This unit's maximum power requirement is 504 watts.

When installing the stove in a mobile home, it must be electrically grounded to the steel chassis of the home and bolted to the floor.

GLASS: Do not abuse the glass by striking or slamming the door. Do not attempt to operate the stove with broken glass. The stove uses ceramic glass. Replacement glass must be purchased from an Enviro dealer. Do not attempt to open the door and clean the glass while the unit is in operation or if glass is hot. To clean the glass, use a soft cotton cloth and mild window cleaner, gas or wood stove glass cleaner, or take a damp paper towel and dip into the fly ash. This is a very mild abrasive and will not damage the glass. Do not use polishing compounds or abrasive cleaners.

KEEP ASH PAN FREE OF RAW FUEL. DO NOT PLACE UNBURNED OR NEW PELLET FUEL IN ASH PAN. A fire in the ash pan may occur.

INSTALLATION: Contact your local building or fire official to obtain a permit and any information on installation restrictions and inspection requirements for your area.

Be sure to maintain the structural integrity of your home when passing a vent through walls, ceilings, or roofs, and all construction meets local building codes. It is recommended that the unit be secured into its position in order to avoid any displacement. This appliance must be installed on a floor with an adequate load bearing capacity, if existing construction doesn't meet load capacity, suitable measures (e.g. load distributing plate) must be taken to achieve it.

DO NOT INSTALL A FLUE DAMPER IN THE EXHAUST VENTING SYSTEM OF THIS UNIT.

DO NOT CONNECT THIS UNIT TO A CHIMNEY FLUE SERVING ANOTHER APPLIANCE.

FRESH AIR: This unit uses large quantities of air for combustion; outside Fresh Air connection is **strongly** recommended. Fresh Air **must** be connected to all units installed in Mobile and "Air Tight Homes" (R2000) or where required by local codes.

Consider all large air moving devices or any other appliance which may compete for fresh air when installing the unit and provide room air accordingly. NOTE: Extractor fans when operating in the same room or space as the appliance may cause problems. Limited air for combustion may result in poor performance, smoking and other side effects of poor combustion.

The stove's exhaust system works with negative combustion chamber pressure and a slightly positive chimney pressure. It is very important to ensure that the exhaust system be sealed and airtight. The ash pan and viewing door must be locked securely for proper and safe operation of the pellet stove.

Do not burn with insufficient combustion air. A periodic check is recommended to ensure proper combustion air is admitted to the combustion chamber. Setting the proper combustion air is achieved by adjusting the slider damper located on the left side of the stove.

Soot or creosote may accumulate when the stove is operated under incorrect conditions such as a rich burn (black tipped, lazy orange flames).

If you have any questions with regards to your stove or the above-mentioned information, please feel free to contact your local dealer for further clarification and comments.

SINCE SHERWOOD INDUSTRIES LTD. HAS NO CONTROL OVER THE INSTALLATION OF YOUR STOVE, SHERWOOD INDUSTRIES LTD. GRANTS NO WARRANTY IMPLIED OR STATED FOR THE INSTALLATION OR MAINTENANCE OF YOUR STOVE. THEREFORE, SHERWOOD INDUSTRIES LTD. ASSUMES NO RESPONSIBILITY FOR ANY CONSEQUENTIAL DAMAGE(S).

SAVE THIS INSTRUCTION MANUAL FOR FUTURE REFERENCE.

Specifications

Dimensions:

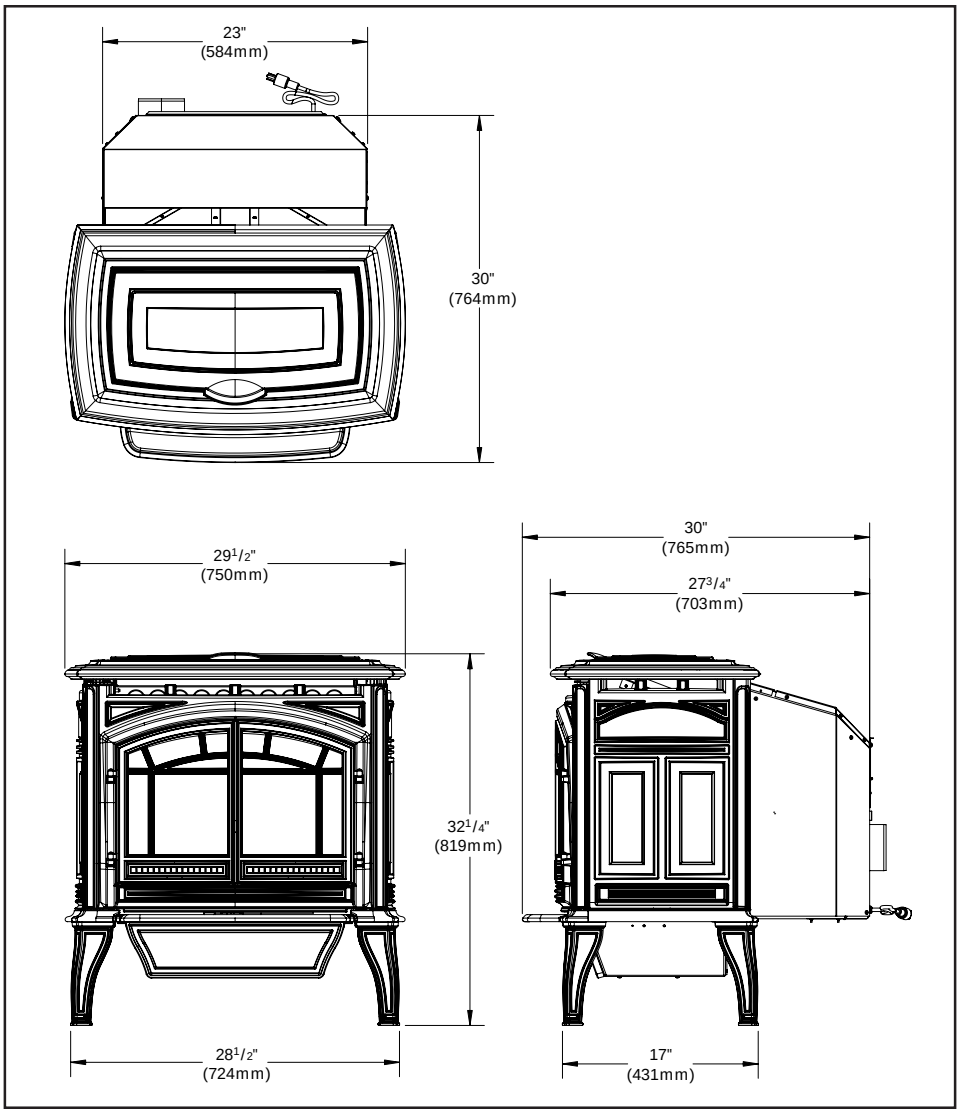

Figure 1: Dimensions of M-55C-FS.

Specifications:

Input rating when using: Wood Pellets/Corn - 55,000BTU (16.1KW•hr) & Wheat/Barley - 53,000BTU (15.5KW•hr).

Table 1: M-55C-FS Specifications.

Description	Fuel type	
Residential Pellet Heater	6mm (¼") dia. Pellets - wood, corn, wheat, & barley*	
Voltage	Current	Max Power
110 - 120 V	4.2 Amps	504 Watts
Frequency	Hopper Capacity	Consumption on Low
60 Hz	up to 60 lb (36.3 Kg)	1.5 lb/hr (0.68 Kg/hr)*
Testing Standard	Weight (with full hopper)	Consumption on High
ASTM 1509-04	485 lb (220 Kg)	6.5 lb/hr (2.95 Kg/hr)*

*Note: Consumption will vary with the type of fuel used.

Operating Instructions

Control Board Functions:

Note: The Control Panel is located underneath the units Cast Hopper Lid which is attached to a safety switch that will immediately stop the auger. The switch will stop operation of the stove and display a #4 flash code if the lid is not closed within two minutes.

1. **ON/OFF BUTTON:** Used to turn the unit ON and OFF manually.
2. **HEAT OUTPUT INDICATOR:** Shows the present Heat Level output setting and the Feed Trim while it is being adjusted.
3. **THERMOSTAT SWITCH:** Sets the unit's control mode; AUTO/OFF or HIGH/LOW (when using a Thermostat or Timer) or MANUAL.

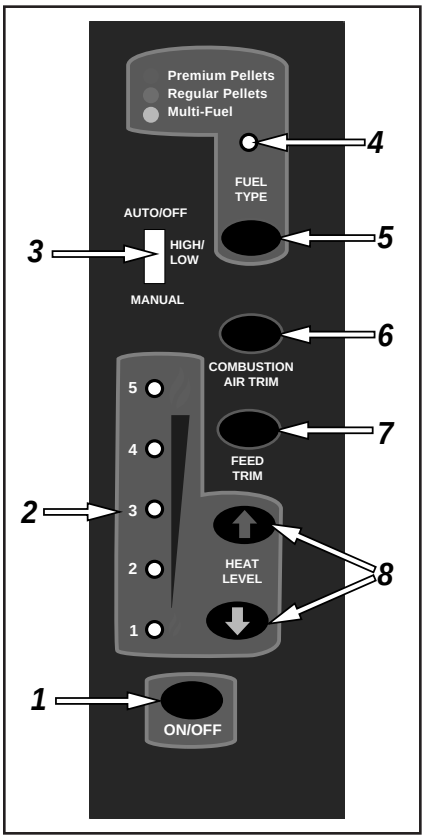

Figure 2: Circuit Board Control Panel Decal

4. **FUEL TYPE LIGHTS:** Shows the present Fuel Type selected; Premium Pellets are Red, Regular Pellets are Green, and Multi-fuel is Yellow. The Light flashes during start-up, and when the Thermostat is in control of the Unit.
5. **FUEL TYPE BUTTON:** Used to switch between three fuel type modes: Premium Pellets for high grade wood pellets, Regular pellet for mid or low grade wood pellets, and Multi-Fuel for other fuel types.
6. **COMBUSTION AIR TRIM BUTTON:** Increases or Decreases the Fan voltage. When pressed all lights on Heat Level Indicator will come on except the one that is the set point. Hold Trim Button down and press the UP or DOWN Heat Level Arrow to adjust setting. #3 Light is the default setting.

   Depending on Fuel quality Ignition problems may occur at higher altitudes, this can be resolved by trimming the Combustion Fan to a higher setting.
7. **FEED TRIM BUTTON:** Used in conjunction with the Heat Level Adjustment Buttons to adjust the Feed Trim. It can be increased by two (2) feed settings or it can be decreased by two (2) feed settings. #3 Light is the default setting.
8. **HEAT LEVEL ADJUSTMENT BUTTONS:** Changes the Heat Setting of the Unit from LO to HIGH. Press the Arrow Up button to increase Heat, and Arrow Down to decrease Heat. Heat level adjustments will not take effect until startup cycle is complete (10-15 mins)

Automatic Safety Features of Your Pellet Stove:

A. EXHAUST TEMPERATURE SWITCH: The stove will shut off when the fire goes out and the exhaust temperature drops below 49°C (120°F). It will display a #3 flash code.

B. HIGH LIMIT SAFETY SWITCH: If the temperature on the hopper reaches 93°C (200°F), the auger will automatically stop, the stove will shut down, and it will display a #4 flash code. If this happens, call your local dealer to reset the 93°C (200°F) high limit switch **AND DETERMINE THE CAUSE OF THE OVERHEATING.**

C. VACUUM SWITCH: Notifies when the unit has lost vacuum. This can be caused by either a combustion fan/vent failure, or simply the unit's doors aren't sealed properly. It will display a #2 flash code.

Operating Instructions

Operating Your Pellet Stove:

THE UNIT WILL NOT OPERATE WITH THE DOOR OR ASH BOX OPEN. Open the hopper lid only to refuel or to adjust the controls. the unit will shut down if the hopper lid is left open for longer than two minutes.

CAUTION: When operating during adverse weather, such as high winds or freezing rain, if the unit exhibits dramatic changes in combustion stop using the unit immediately. Watch for blocked exhaust outlet.

PRE-BURN CHECK: The burn pot liner holes must be clear and the liner installed properly against the ignitor tube and locked in place. Ensure the agitator is properly locked in. Check the hopper for enough pellets to start the unit.

Note: To change fuel type, ensure the Thermostat Switch is set to Manual Mode. Press the Off button and then press the Fuel Type button to cycle through the available fuel types.

The unit has an automatic cleaning cycle; every thirty (30) minutes the agitator will turn continuously for one (1) minute to help clean out the burn pot liner.

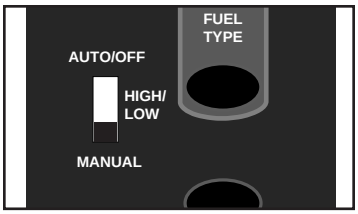

Figure 3: Thermostat Switch in MANUAL position.

MANUAL MODE:

INITIAL START-UP: Press the ON / OFF button. The stove will turn on. The Auger Feed Rate is pre-programmed during start-up. The Heat Level Indicator will show the Heat Level that the stove will run at after start-up.

If this is the first time the unit has been started or the unit has run out of fuel, the auger may need to be primed. If there is no fuel in the burn pot after two (2) minutes the liner can be primed with a handful of pellets . The agitator will not operate for the first five (5) minutes after the ON button has been pressed. After the five (5) minutes it will pulse at the same interval as the feed auger.

When the start-up sequence is complete the unit will ramp up in two (2) minute intervals until it has reached the designated heat setting. Once a fire has been established, the convection blower will turn on after ten (10) minutes.

To OPERATE: Press the Heat Level buttons to change the desired Heat Level Output setting.

The speed of the convection blower is controlled by the setting of the heat level.

The Feed Trim button pressed in conjunction with the Heat Level adjustment buttons can be used to adjust the feed trim. It can be increased by two (2) feed settings or it can be decreased by two (2) feed settings.

HIGH/LOW MODE: (Requires a Thermostat or Timer)

INITIAL START-UP: See MANUAL MODE above.

OPERATION: When the thermostat calls for heat (contacts are closed), the stove settings are adjustable as per Manual Mode. When the thermostat contacts open, the HEAT LEVEL and Fans will drop down to the LOW setting until the thermostat contacts close again. The stove will come back to the previous HEAT LEVEL setting once the thermostat contacts close.

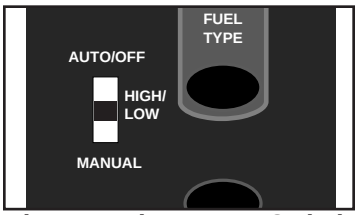

Figure 4: Thermostat Switch in HIGH/LOW position.

AUTO/OFF MODE: (Requires a Thermostat or Timer)

INITIAL START-UP: See MANUAL MODE above.

OPERATION: When the thermostat contacts close, the unit will light automatically. Once up to temperature, the stove operates the same as in MANUAL. When the thermostat contacts open, the stove's HEAT LEVEL and Fans will drop down to the LOW setting for 30 minutes. If the thermostat contacts close within the 30 minutes, the HEAT LEVEL will return to the previous MANUAL

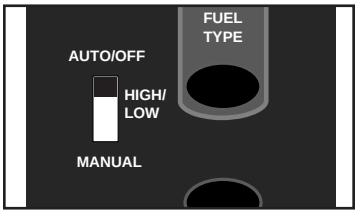

Figure 5: Thermostat Switch in AUTO/OFF position.

setting. If the thermostat contacts remain open, the stove automatically begins its shutdown routine. The stove will re-light when the thermostat contacts close again.

Turning Your Pellet Stove Off:

- MANUAL and HI / LOW mode: To turn the unit OFF, simply press the ON / OFF button. This will stop the feed of pellets. The blowers will continue to operate and cool the stove down. When cool enough, the stove will turn off.
- AUTO / OFF mode: To turn the unit OFF, turn the Thermostat down or Timer off.
- On shut down the burn pot agitator will run continuously for five (5) minutes on premium mode, one (1) minute on regular mode, and five (5) minutes on multi-fuel mode.

DO NOT turn unit off during start-up or unplug unit while operating; this may lead to smoke escaping from the stove.

Slider/Damper Set-Up:

This is used to regulate the airflow through the pellet stove and has been set at the factory.

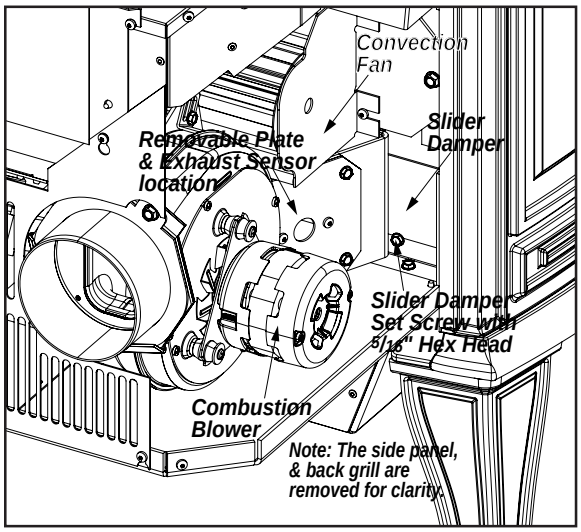

Figure 6: Slider/Damper Plate in Unit.

Figure 7: Efficient Flame.

This unit is designed to operate within a negative pressure range that may only be adjusted by a qualified technician. This can be measured using a Magnahelic pressure gauge once the unit has been running on heat level 5 setting after one hour of burn time. This adjustment is necessary for varying venting configurations. The reading can be taken from the ⅛″ hole located on the right side of the Ash Box.

The Combustion Trim, Feed Trim and Fuel Type Functions can be used to compensate for varying fuel qualities. Refer to the Owners Manual for circuit board operation.

If, after long periods of burning, the fire builds up or there is a build up of clinkers, this would be a sign that the fuel quality is poor - this requires more air.

The easiest way to make sure that an efficient flame is achieved is to understand the characteristics of the fire.

- A tall, lazy flame with dark orange tips requires more air.
- A short, brisk flame, like a blowtorch, has too much air .
- If the flame is in the middle of these two characteristics with a bright yellow/orange, active flame with no black tips then the air is set for proper operation, refer to Figure 7.

SPECIAL NOTES:

Fuel quality is a major factor in how the stove will operate. If the fuel has a high moisture content or ash content the fire will be less efficient and has a higher possibility of the fire building up and creating clinkers (hard ash build-up).

Routine Cleaning and Maintenance

The following list of components should be inspected and maintained routinely to ensure that the appliance is operating at its optimum and giving you excellent heat value. The appliance, flue gas connector and the chimney flue require regular cleaning. Check them for blockage prior to re-lighting after a prolonged shut down period.

Check the Burn Pot Liner DAILY	
Weekly	**Bi-annually or 2 Tons of Fuel**
Burn Pot and Liner - Empty	Exhaust Vent
Agitator	Fresh Air Intake Tube
Heat Exchanger Tubes	Blower Mechanisms
Door Glass	Heat Exchanger Tubes
Ash Pan and Door Gaskets	Behind Firebox Liners
Inside Firebox	All Hinges
Door Latch	Post Season Clean-up
Ash Box	
Cleaning Ports	

TOOLS REQUIRED TO CLEAN UNIT:
Torx T-20 Screwdriver, ¼", 5/16" ⅜", & 7/16" wrench and/or socket, Brush, Soft Cloth, and Vacuum with fine filter bag

BURNER POT AND LINER (Checked Daily/Emptied Weekly)

This is the 'pot' where the pellets are burned. **Only clean when the unit is cold.**

Note: If, after long periods of burning, the fire continually builds up and overflows the burn pot or there is a build up of clinkers, this is an indication that the pellet fuel quality is poor or the stove may need cleaning. Check the stove for ash build up (clean if required) and adjust the combustion air trim and if required the slider/damper to produce the proper clean combustion.

1. Open the door using the door handle located on the right-hand side of the stove.
2. Lift the lever on burn pot to unlock the fire grate and remove it.
3. The agitator locks at the right; rotate the top of the agitator towards the back of the firebox to unlock it, slide it to the left, and lift it out of the burn pot liner.
4. Lift the burn pot liner out of the stove.
5. Lift the burn pot from the firebox by gently lifting it up at the front of the burn pot, then slide it out from around the air intake tube and the ignitor cartridge.
6. Remove any build up on the agitator (calcium build-ups are common when burning corn). Using a metal scrapper, remove material that has accumulated or is clogging the liner's holes. Then dispose of the scrapped ashes from the liner and from inside the burn-pot.
7. Place the burn-pot back into the stove, there are hooks at the front of the burn pot that sit in a mount in the firebox. Ensure that the air intake tube and the ignitor cartridge. are properly inserted into the burn pot.
8. Place the liner back into the burn-pot, making sure that the ignitor hole in the liner is aligned with the ignitor tube; push the liner up against the ignitor tube.
9. Slide the agitator back into place and turn rotate the top towards the front of the stove to lock it in.
10. Set the fire grate in place, it should sit level on the front and back of the burn pot liner. Lock it in with the lever on the burn pot.
11. Close the door

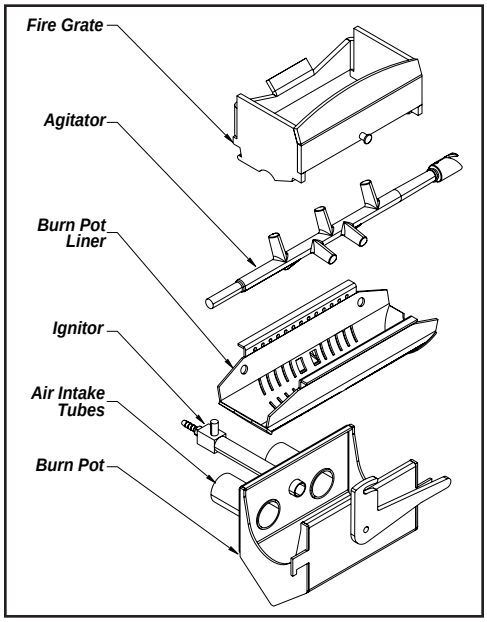

Figure 8: Burn Pot Assembly.

Routine Cleaning and Maintenance

HEAT EXCHANGER TUBES (Weekly)

The Heat Exchanger Tube's Cleaning Rake Handle is located above the firebox door. Move the handle all the way in and out a few times (ONLY WHEN THE UNIT IS COLD) in order to clean away any fly ash that may have collected on the heat exchanger tubes. As different types of pellets produce different amounts of ash, cleaning of the tubes should be done on a regular basis to enable the unit to run efficiently.

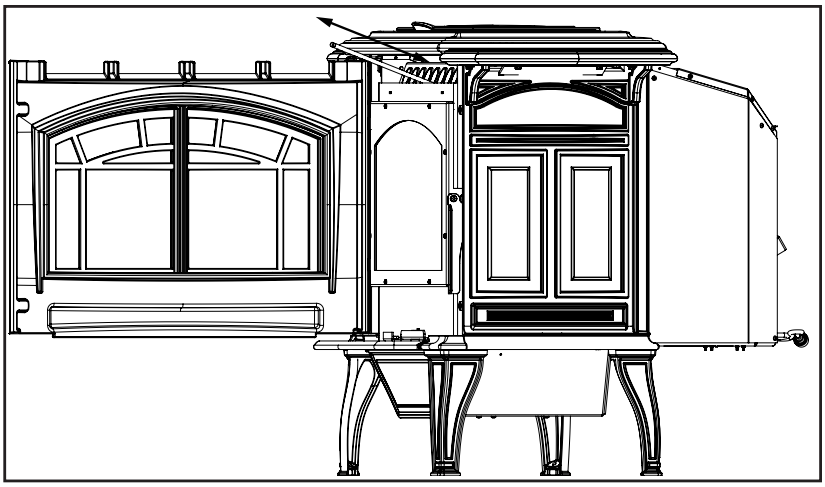

Figure 9: M-55C-FS Heat Exchanger Cleaning.

DOOR GLASS CLEANING (Weekly)

It is recommended that the door glass be cleaned weekly to keep creasote/soot levels to a minimum. Cleaning of the glass must only be done when stove is cold. Open the door by lifting the handle. The glass can be cleaned by wiping down the outside and inside of the glass with a dry soft cloth.

If the glass has build up that can not be removed with only the cloth, clean the glass using paper towel and a gas appliance glass cleaner, this may be purchased through most dealers. If a gas appliance glass cleaner is not available, use a damp paper towel dipped in fly ash to clean the glass. After the glass has been cleaned use the dry soft cloth to wipe down the outside and inside of the glass.

ASH PAN AND DOOR GASKETS (Weekly)

After extended use the gasketing may come loose. To repair this, glue the gasketing on using high-temperature fiberglass gasket glue available from your local dealer. This is important to maintain an airtight assembly.

ASH BOX (Weekly)

IMPORTANT: The unit must be OFF while the ash pan is removed.

The ash box is located behind the lower door (see Figure 10). To remove the ash box, lift the latch on the right, open the ash box door, and lift it out.

Dump the ashes into a metal container stored away from combustibles. Monitor the ash level every week. Remember that different pellet fuels will have different ash contents. Ash content is a good indication of fuel efficiency and quality. Refer to "Safety Warnings And Recommendations" for disposal of ashes. Vacuum the inside of the ash pan compartment inside the pedestal including the hole at the top back of the compartment. Insert the ash box until it makes contact with the ash box stop.

DO NOT PLACE UNBURNED OR RAW PELLET FUEL IN ASH PAN.

EXHAUST VENT (Biannually)

This vent should be cleaned every year or after two tons of pellets. We recommend contacting your dealer for professional cleaning. To clean the vent pipe, tap lightly on the pipe to dislodge any loose ash. Open the bottom of the "T" to dump the ash, then vacuum as much of the ash out of the vent pipe as possible.

FRESH AIR INTAKE (Biannually)

Inspect periodically to be sure that it is not clogged with any foreign materials.

EXHAUST PASSAGES (Biannually)

1. Open the firebox door by lifting the handle.
2. Remove the burn pot assembly and clean all the parts.
3. Lubricate all screws with penetrating oil.
4. Lift the baffle, remove the firebox liner, and lift out the firebox lower. Vacuum the firebox and firebox liner thoroughly.
5. Open the ash box door; remove the ash box and cleanout the cavity.
6. Re-install the ash box, firebox lower, baffle, firebox liner, burn pot, and burn pot liner
7. Close the firebox and ash pan doors and secure.

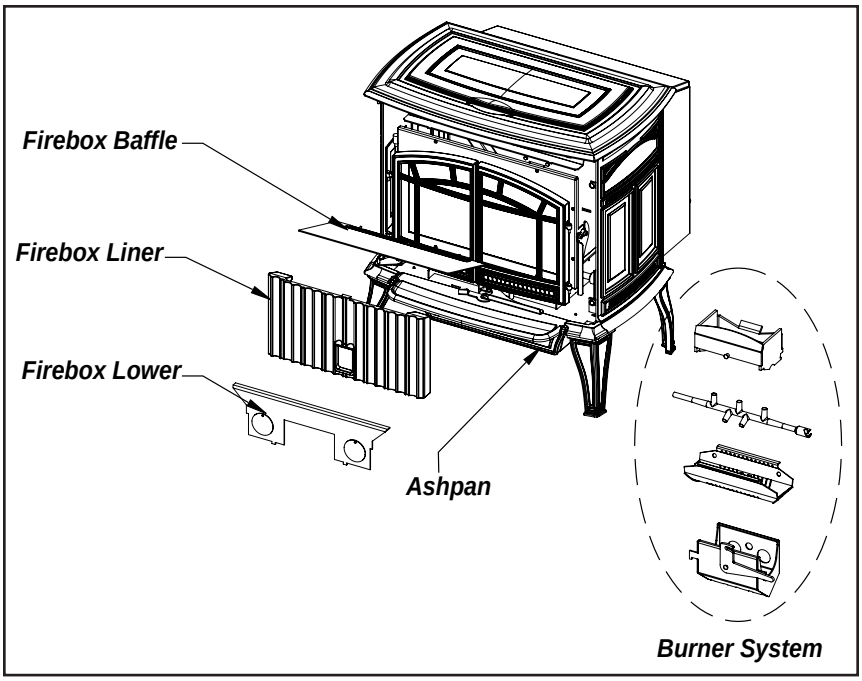

Figure 10: M-55C-FS Exhaust Passages.

BLOWER MECHANISMS (Annually)

Unplug the stove then open the right and left side panels to access the two blowers. Remove the T-20 torx Screws located on the top and bottom of the rear access panels.. Vacuum all dust from motors. The blower motors has sealed bearings, DO NOT lubricate this motor. Check gaskets and replace if needed.

POST SEASON CLEAN-UP

Once you are finished using the pellet appliance for the season, unplug the stove for added electrical protection. It is very important that the stove be cleaned and serviced as stated above.

CLEANING PAINTED SURFACES

Please clean surfaces with a soft damp cloth.

CLEANING ENAMEL SURFACES

Enamel Finishes and painted surfaces can be wiped down with a soft damp cloth. Wd/40 oil can be used to clean enameled casting if necessary.

FIREBOX LINER

The paint on the Firebox Liner may peel. This is due to extreme conditions applied to the paint and is in no way covered by warranty.

DOOR GLASS REPLACEMENT

It is recommended that your dealer replace the glass if broken. The door glass is made of high temperature PYRO CERAMIC and must be purchased through your dealer. To replace the glass, unscrew and remove the six (6) retainer nuts using a $^{5}/_{16}$" socket. Remove the glass and any broken pieces. High temperature fiberglass tape should be used around the glass in the same location as the original fiberglass. Insert the glass into the retainer, screw the door to the retainer, and gently tighten nuts. Ensure that edge clearances are maintained. The use of substitute materials is prohibited: #50-2119.

Installation

Deciding Where to Locate your Pellet Appliance:

1. Do not install the stove in a bedroom or room where people sleep in.
2. Locate the stove in a large and open room that is centrally located in the house. This will optimize heat circulation.
3. Check clearances to combustibles and for the least amount of interference to house framing, plumbing, wiring, etc.
4. You can vent the stove with approved pipe through an exterior wall behind the unit or pass it through the ceiling and roof. The stove can connect to an existing masonry or metal chimney (must be lined if the chimney is over 6" (15 cm) diameter, or over 28 inches² (180 cm²) cross sectional area).
5. This unit must not be installed directly onto carpet. If it is to be installed on a carpeted area, a solid surface (wood, metal or approved hearth pad) must be installed between the unit and the carpet.
6. This unit uses large quantities of air for combustion; outside Fresh Air connection is **strongly recommended**. Fresh Air **must** be connected to all units installed in Mobile and "Air Tight Homes" (R2000) or where required by local codes.
7. Do not obtain combustion air from an attic, garage or any unventilated space. Combustion air may be obtained from a ventilated crawlspace.
8. The power cord is 8 feet (2.43 m) long and may require a grounded extension cord to reach the nearest electrical outlet.

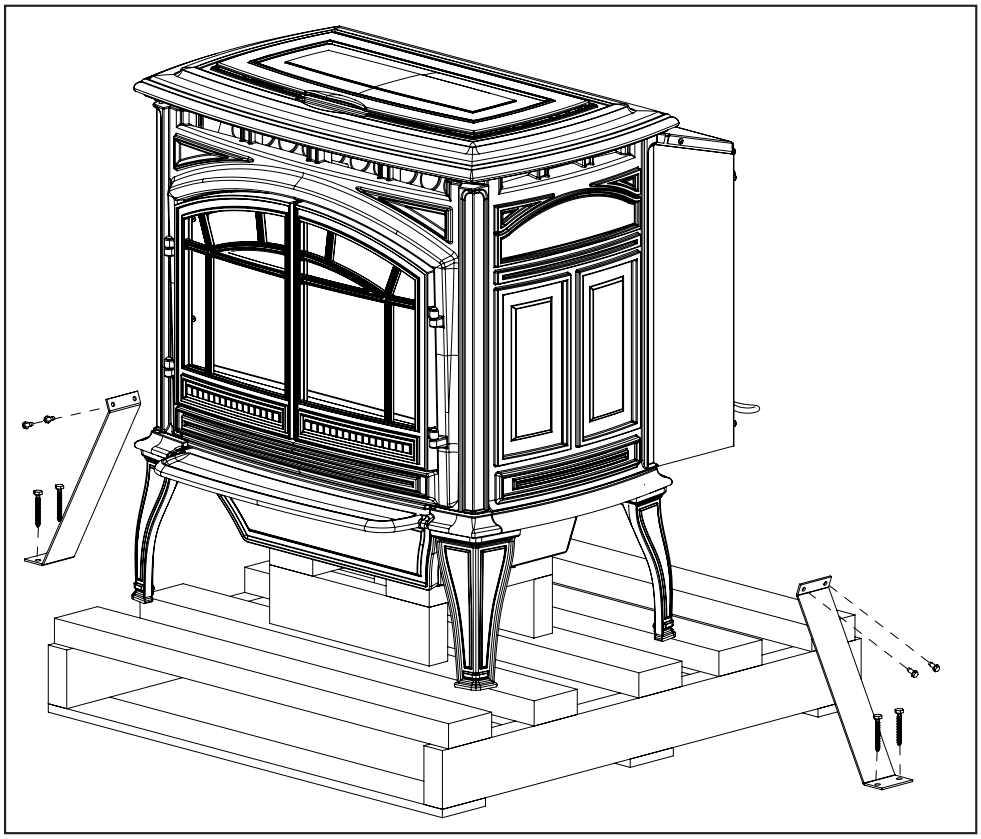

Figure 3: Screws to take out to remove stove from pallet.

Removing Pellet Stove From Pallet:

1. Remove the two (2) screws that hold the brackets to the pallet on either side of the unit.
2. Remove the two (2) 5/16" hex head screws that hold the brackets to the units.

Installation

Clearances to Combustibles:

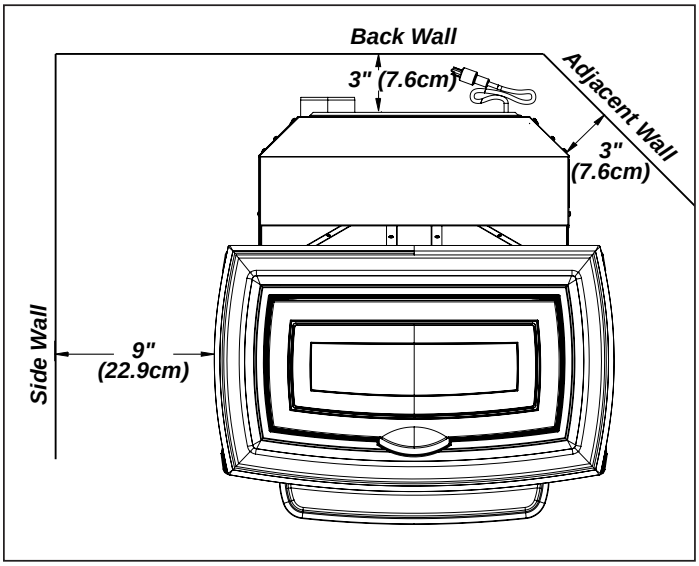

Figure 4: M-55C-FS Clearance to Combustibles.

These dimensions are minimum clearances but it is recommended that you ensure sufficient room for servicing, routine cleaning and maintenance.

Side wall to unit	9 inches	(22.9 cm)
Back wall to unit	3 inches	(76 cm)
Corner to unit	3 inches	(76 cm)
Ceiling height	60 inches	(152 cm)

Alcove Maximum Depth	36 inches (91 cm)
Alcove Minimum Width	48 inches (122 cm)
Alcove Minimum Height	60 inches (152 cm)

The unit must be installed with a minimum of 6" (152 mm) of floor protection in front of and to the sides of the door opening.

Leveling Leg Adjustment:

The leveling legs should be adjusted for the unit to to sit level and not rock if installed on uneven flooring.

1. Turn levelling legs until they are at the required hieghts.

2. Tighten the nut to hold the leveling leg in position.

Thermostat Installation:

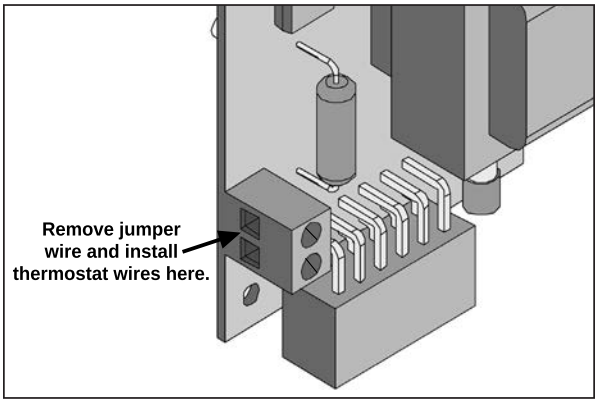

Figure 5: Thermostat wire placement.

1. Install the wall thermostat (millivolt rated thermostat recommended, or a 12/24 Volt rated thermostat set to millivolts) in a location that is not to close too the unit but will effectively heat the desired area.
2. Connect the Thermostat using a 2 x 18 gauge wire from the unit to the thermostat.

If the heat in the room becomes to great, the high limit switch may turn the stove off and the switch will have to be manually reset. The switch is found below the firebox top on the hopper's right surface.

VENT TERMINATION REQUIREMENTS:

IT IS RECOMMENDED THAT YOUR PELLET STOVE BE INSTALLED BY AN AUTHORIZED DEALER/INSTALLER.

Table 2: Use in conjunction with Figure 6 for allowable exterior vent termination locations.

Letter	Minimum Clearance	Description
A	24 in (61 cm)	Above grass, top of plants, wood, or any other combustible materials.
B	48 in (122 cm)	Beside/below any door or window that may be opened. (18” (46 cm) if outside fresh air installed.)
C	12 in (30 cm)	Above any door or window that may be opened. (9” (23 cm) if outside fresh air installed.)
D	24 in (61 cm)	To any adjacent building, fences and protruding parts of the structure.
E	24 in (61 cm)	Below any eave or roof overhang
F	12 in (30 cm)	To outside corner.
G	12 in (30 cm)	To inside corner, combustible wall (vertical and horizontal terminations).
H	3 ft (91 cm) within a height of 15 ft (4.5 m) above the meter/regulator assembly	To each side of center line extended above natural gas or propane meter/ regulator assembly or mechanical vent.
I	3 ft (91 cm)	From any forced air intake of other appliance
J	12 in (30 cm)	Clearance to non-mechanical air supply inlet to building, or the combustion air inlet to any appliance.
K	24 in (61 cm)	Clearance above roof line for vertical terminations.
L	7 ft (2.13 m)	Clearance above paved sidewalk or paved driveway located on public property.

1. Do not terminate the vent in any enclosed or semi-enclosed areas such as a carport, garage, attic, crawlspace, narrow walkway, closely fenced area, under a sundeck or porch, or any location that can build up a concentration of fumes such as stairwells, covered breezeway, etc.

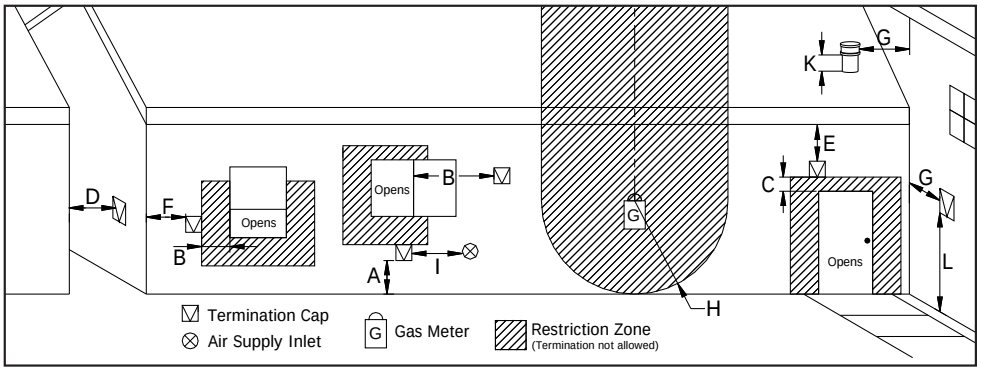

Figure 6: Use in conjunction with Table 2 for allowable exterior vent termination locations.

2. Vent surfaces can become hot enough to cause burns if touched by children. Non-combustible shielding or guards may be required.

3. Termination must exhaust above the inlet elevation. It is recommended that at least five feet of vertical pipe be installed outside when the appliance is vented directly through a wall, to create some natural draft to prevent the possibility of smoke or odor during appliance shut down or power failure. This will keep exhaust from causing a nuisance or hazard from exposing people or shrubs to high temperatures. In any case, the safest and preferred venting method is to extend the vent through the roof vertically.

4. Distance from the bottom of the termination and grade is 12” (30 cm) minimum. This is conditional upon the plants and nature of grade surface. The exhaust gases are hot enough to ignite grass, plants and shrubs located in the vicinity of termination. The grade surface must not be lawn.

5. If the unit is incorrectly vented or the air to fuel mixture is out of balance, a slight discoloration of the exterior of the house might occur. Since these factors are beyond the control of Sherwood Industries Ltd, we grant no guarantee against such incidents.

NOTE: Venting terminals shall not be recessed into walls or siding.

OUTSIDE FRESH-AIR CONNECTION:

This Heater must have adequate air for proper combustion in the room that it is installed.

A Fresh-air intake is strongly recommended for all installations. Failure to install intake air may result in improper combustion as well as the unit smoking during power failures.

The inlet to the intake must be below and a minimum of 12" (30cm) away from the unit exhaust outlet.

Outside fresh air is mandatory when installing this unit in airtight homes and mobile homes.

When connecting to an outside fresh air source, do not use plastic or combustible pipe. A 3" minimum (76 mm) ID (inside diameter) steel, aluminum or copper pipe or ducting should be used. The inlet must have a screen installed. It is recommended, when you are installing a fresh air system, to keep the number of bends in the pipe to a minimum.

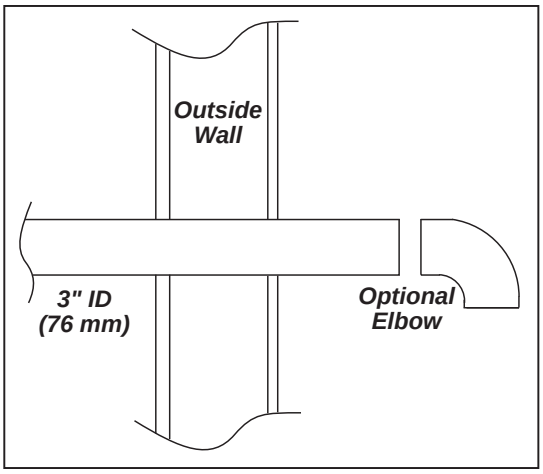

Figure 7: Outside Air Connection.

EXHAUST AND FRESH AIR INTAKE LOCATIONS:

This unit uses a 4" exhaust vent.

EXHAUST:

Base of unit to center of flue

15½" (392 mm)

Center of unit to center of flue

6 3/8" (162 mm)

FRESH AIR INTAKE.

Base of unit to center of intake

12" (305 mm)

Center of unit to center of intake

4 7/8" (126 mm)

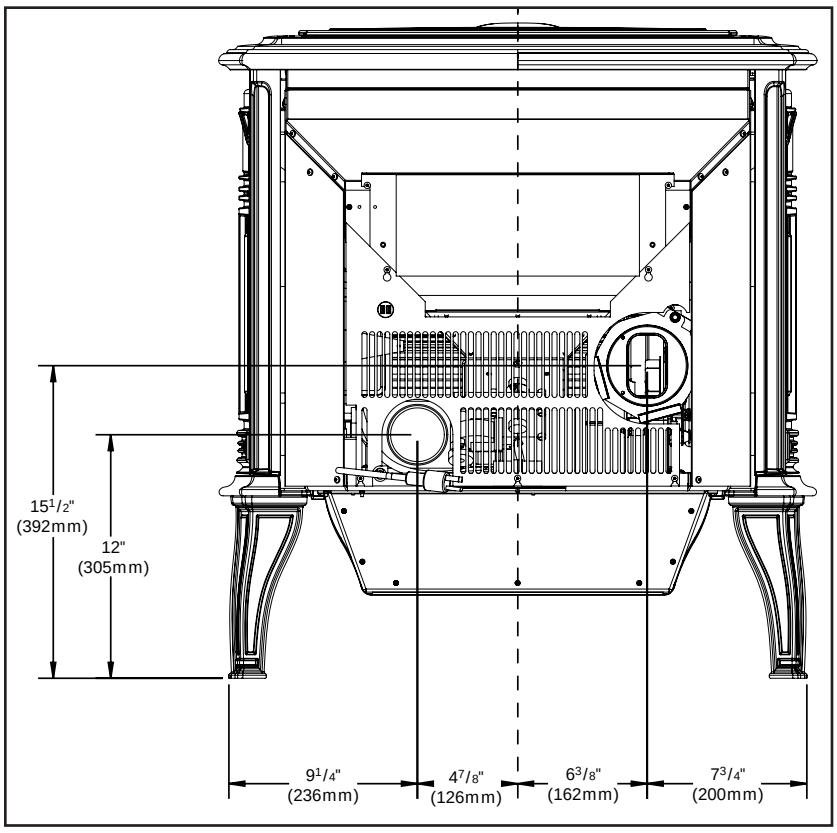

Figure 8: M-55C-FS Inlet and Outlet Location.

MOBILE HOME INSTALLATION:

- Secure the heater to the floor using the four (4) holes in the pedestal.
- Ensure the unit is electrically grounded to the chassis of your home (permanently).
- Do not install in a room people sleep in.
- Outside fresh air is mandatory. Secure outside air connections directly to fresh air intake pipe and secure with three (3) screws evenly spaced.
- All specified components must be used. Do not use any components other than what's specified.

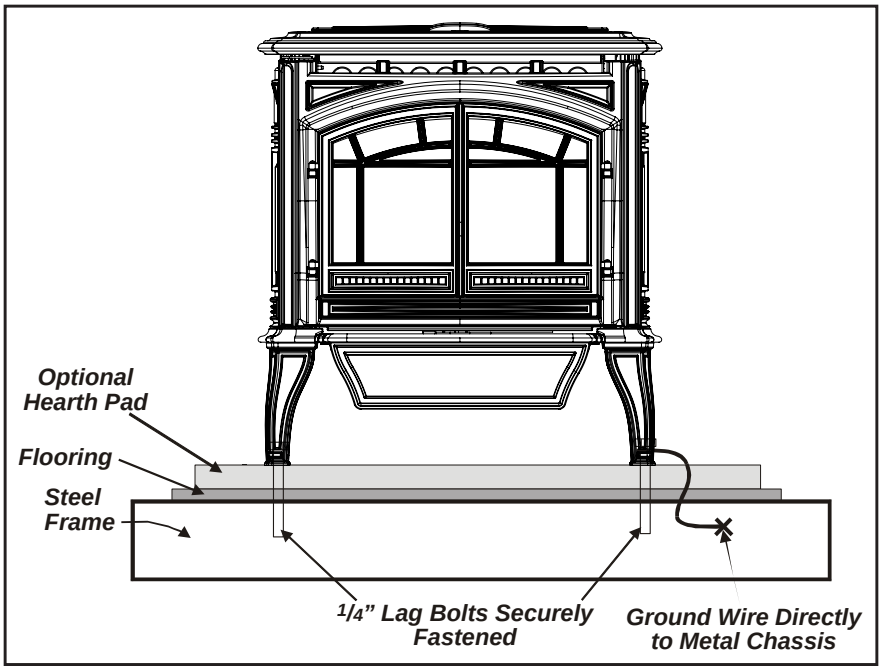

Figure 9: Mobile home installation.

CAUTION: THE STRUCTURAL INTEGRITY OF THE MANUFACTURED HOME FLOOR, WALL AND CEILING/ROOF MUST BE MAINTAINED.

CORNER THROUGH WALL INSTALLATION:

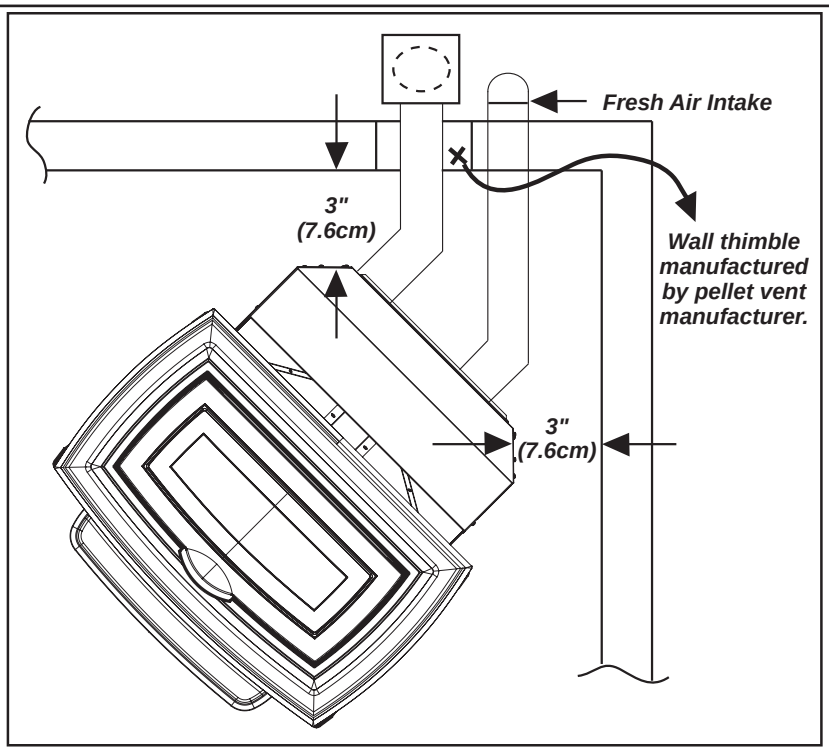

Figure 10: Corner Installation.

HORIZONTAL EXHAUST THROUGH WALL INSTALLATION:

Vent installation: install vent at clearances specified by the vent manufacturer.

A chimney connector shall not pass through an attic or roof space, closet or similar concealed spaces, or a floor, or ceiling. Where passage through a wall or partition of combustible construction is desired, the installation must conform to CAN/CSA-B365 Installation Code for Solid-Fuel-Burning Appliances and Equipment and with all local regulations, including those referring to regional and national. Only use venting of L or PL type or corn certified venting if corn will be burned as a fuel with an inside diameter of 4 inches (100 mm). All joints in the exhaust venting system must be fastened with at least three (3) screws.

1. Place the appliance 15” (37.5 cm) away from the wall. If the stove will be installed a hearth pad, set the unit on it.
2. Locate the center of the exhaust pipe on the stove. Extend that line to the wall. Once you have located the center point on the wall, refer to pellet vent manufacturer installation instructions for correct hole size and clearance to combustibles.
3. Install the wall thimble as per the instructions written on the thimble. Maintain an effective vapour barrier in accordance with local building codes.
4. Install a length of vent pipe into the wall thimble. Try not to have joints inside the thimble. The pipe should install easily into the thimble.
5. Connect the exhaust vent pipe to the exhaust pipe on the stove. Seal the connection with high temperature silicone.
6. Install the fresh air intake (see OUTSIDE FRESH AIR CONNECTION).
7. Push the stove straight back, leaving a minimum of 3” (7.6 cm) clearance from the back of the stove to the wall. Refer to Vent Manufacturers’ instructions if sealant is required.

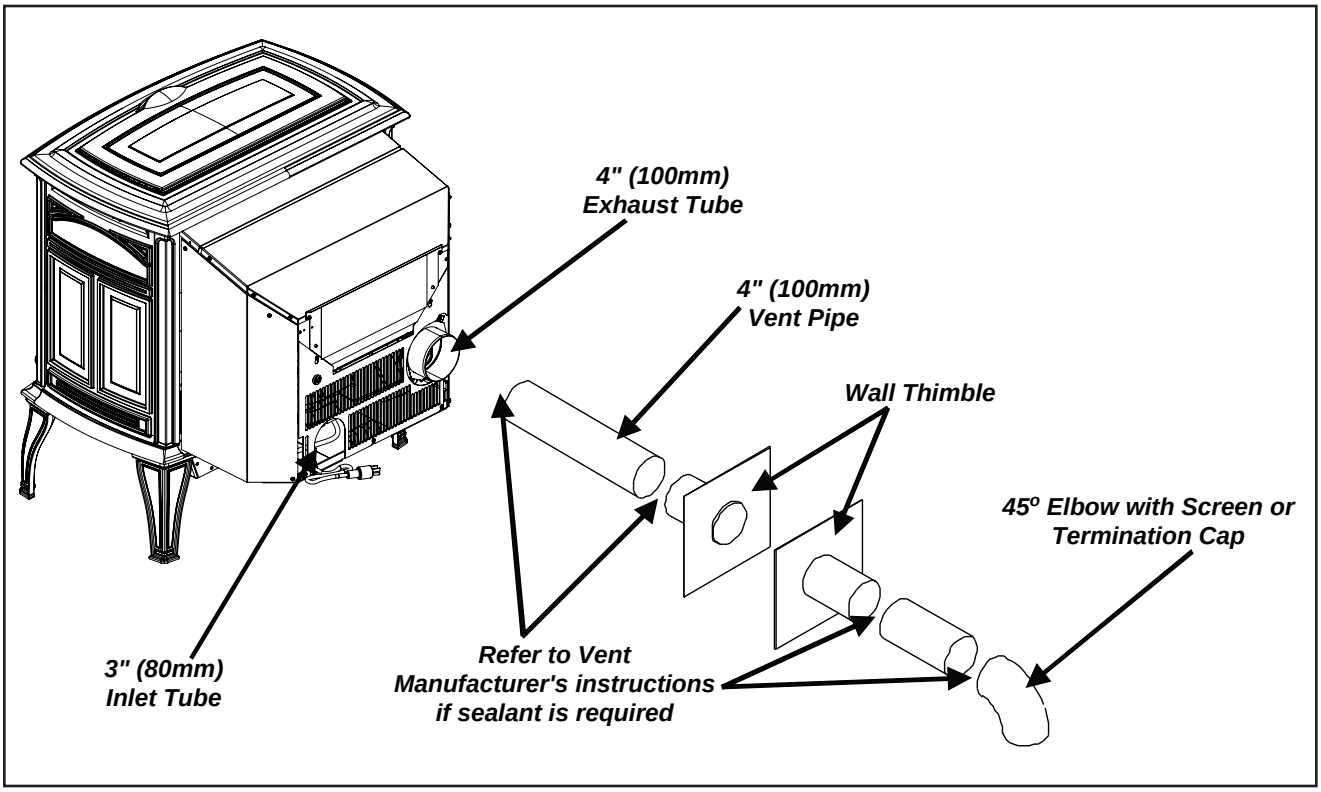

Figure 11: Straight through wall Installation.

8. The pipe must extend at least 12” (30 cm) away from the building. If necessary, bring another length of pipe to the outside of the home to connect to the first section. Do not forget to place high temperature silicone around the pipe that passes through the thimble if required by vent manufacturer.

9. Install a vertical pipe, or if all requirements for direct venting are met, install vent termination. The stainless steel cap termination manufactured by the vent manufacturer is recommended. However, when the vent terminates several feet above ground level and there are no trees, plants, etc. within several feet, a 45° elbow can be used as termination. The elbow must be turned down to prevent rain from entering.

NOTE:

- It is recommended that horizontal through wall installations have 3 to 5 feet (91 to 152 cm) of vertical pipe in the system to help naturally draft the unit in the event of extreme weather or a power outage.
- Some horizontal through wall installations may require a “T” and 3 to 5 feet (91 to 152 cm) of vertical pipe outside the building to help draft the unit. This may be required if a proper burn cannot be maintained, after the stove has been tested and the airflow set. This is due to the back pressure in the exhaust caused by airflow around the structure.
- Follow vent manufacturer guidelines for installation, clearance to combustibles, and sealing of venting. High temp Sealant must be used when connecting vent pipe to the unit’s starter pipe. Improper seals at the vent joints may cause combustion by-products to leak into the room where installed - **seal as required by vent manufacturer.**

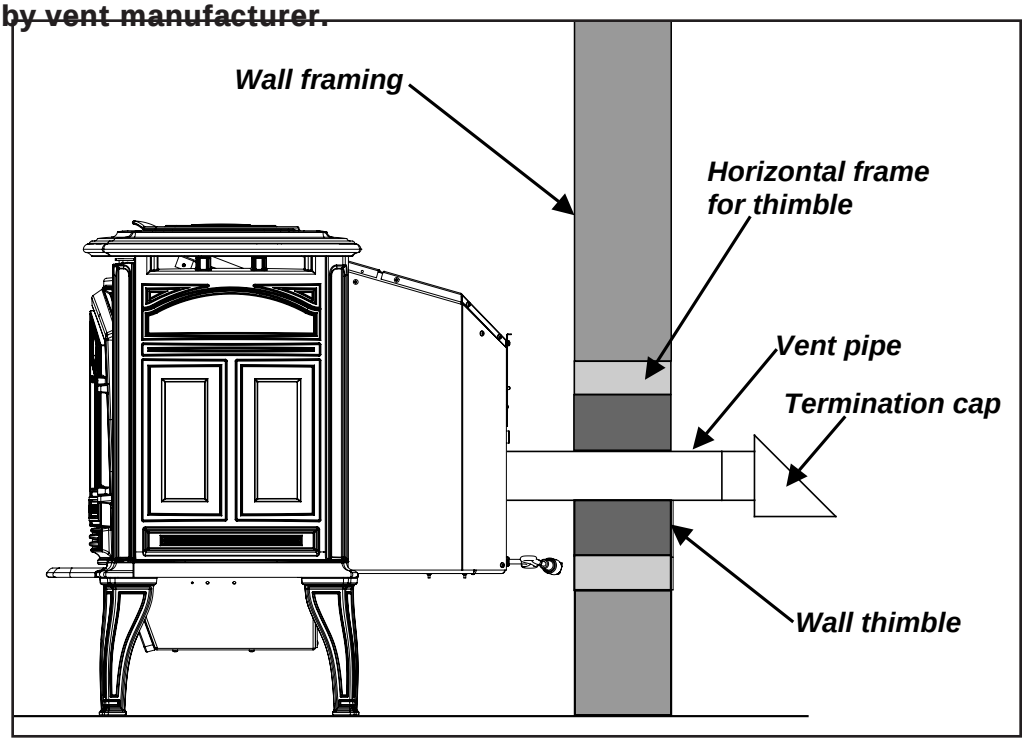

Figure 12: Straight through Wall Installation - Side View.

RECOMMENDED - Through Wall With Vertical Rise and Horizontal Termination Installation:

A 45° down elbow with a screen may be used in place of the termination cap (or stainless steel termination hood).

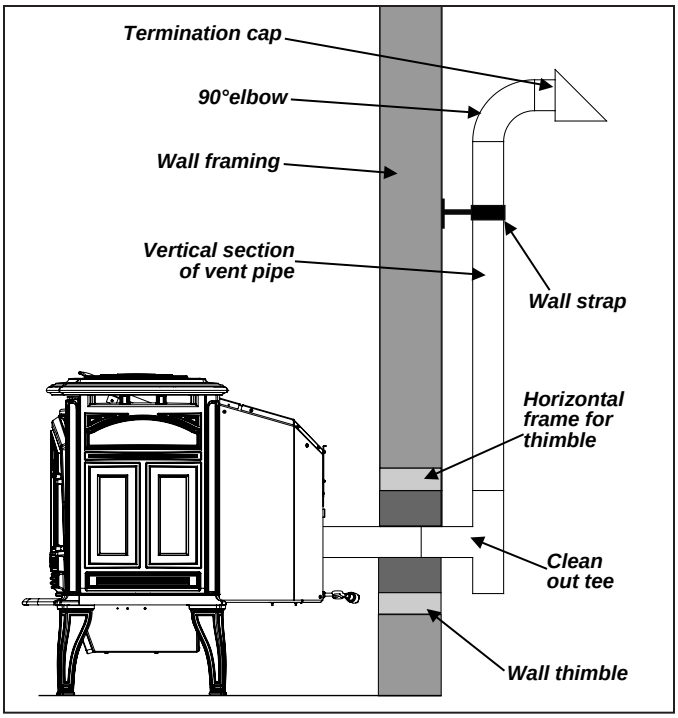

Figure 13: Venting horizontally with rise.

Through Concrete Wall With Vertical Rise Installations:

Installation to use if there is a concrete or retaining wall in line with exhaust vent on pellet stove.

A 45° down elbow with a screen may be used in place of the termination cap (or stainless steel termination hood).

The termination must be 12 inches (30 cm) from the outside wall and 12 inches (30 cm) above the ground.

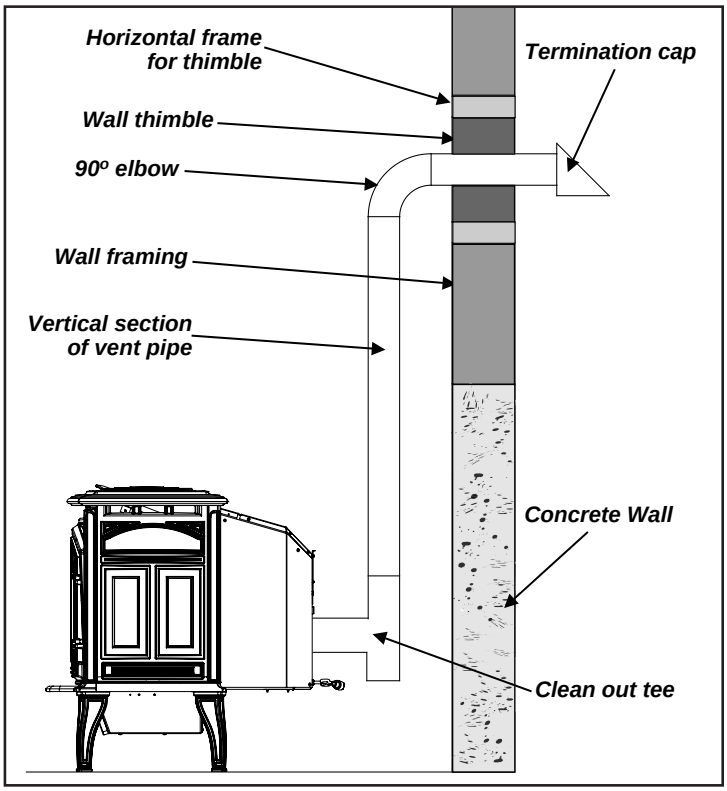

Figure 14: Venting with concrete wall behind unit .

OUTSIDE VERTICAL INSTALLATIONS:

To accomplish an outside vertical pipe installation, follow the "HORIZONTAL EXHAUST THROUGH WALL INSTALLATIONS" section and then finish it by performing the following (refer to Figure 15).

1. Install a tee with clean out on the outside of the house.
2. Install PL vent upward from the tee. Make sure that you install support brackets to keep the vent straight and secure. All joints in the exhaust venting system must be fastened with at least three (3) screws.
3. Install ceiling thimble and secure the flashing as you go through the roof.
4. Ensure that the rain cap is approximately 24" (61 cm) above the roof.

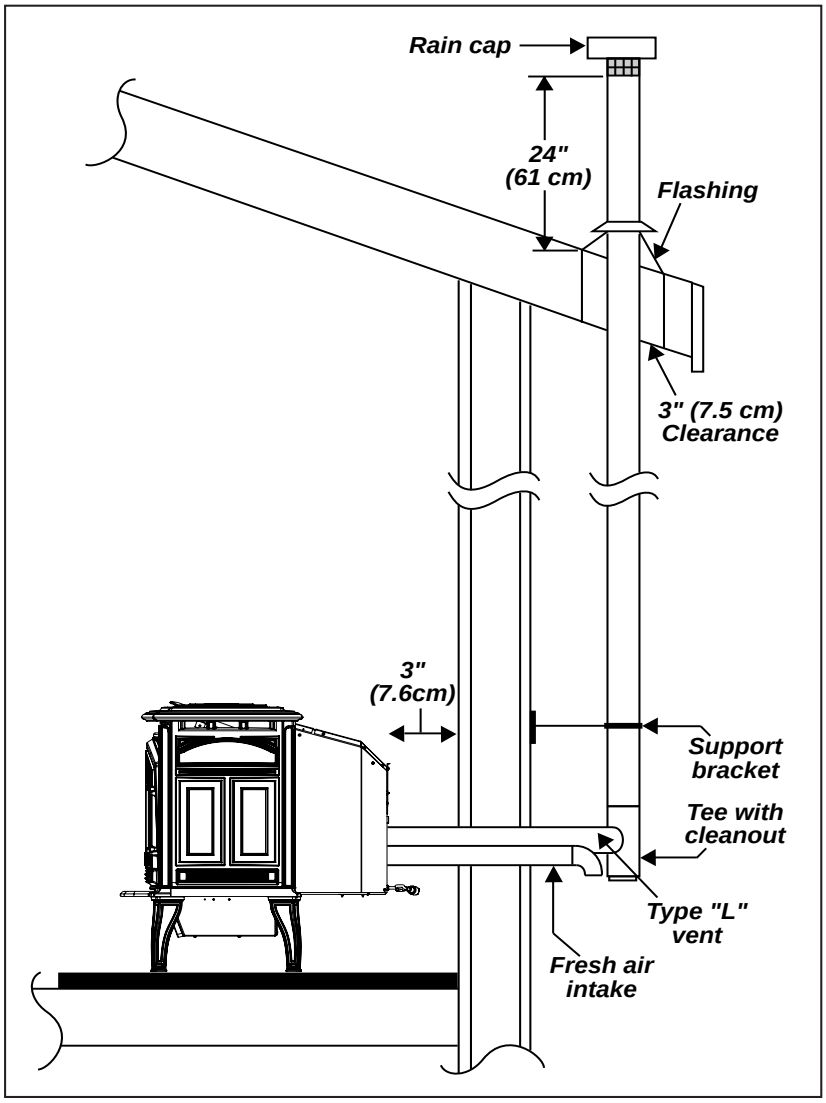

Figure 15: Outside Vertical Installation.

INSIDE VERTICAL INSTALLATIONS:

1. Place the unit on the hearth pad if a hearth pad is to be used (or on solid material if installed on a carpeted surface) and space the unit in a manner so when the pellet vent is installed vertically, it will meet the minimum clearance from a combustible wall stated by the vent manufacturer.
2. Install the tee with clean out.
3. Install the pellet vent upward from tee. When you reach the ceiling, make sure that the vent goes through a ceiling fire stop. Keep attic insulation away from the vent pipe & maintain an effective vapor barrier. All joints in the exhaust venting system must be fastened with at least three (3) screws. Refer to vent manufacturer for distance to combustibles & follow the vent manufacturer's instructions on sealing.
4. Finally, extend the pellet vent to go through the roof flashing.
5. Ensure that the rain cap is approximately 24" (61 cm) above the roof.
6. Install the fresh air system.

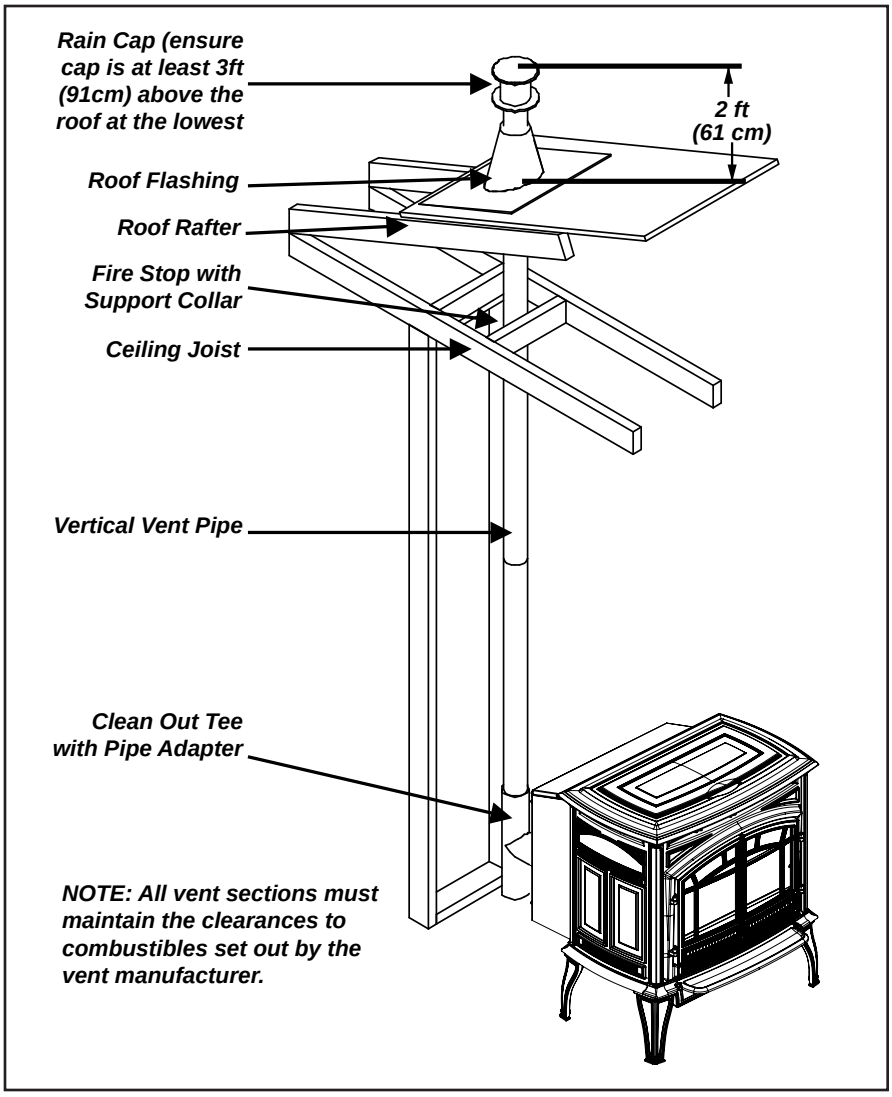

Figure 16: Inside Vertical Installation.

HEARTH MOUNT INSTALLATION:

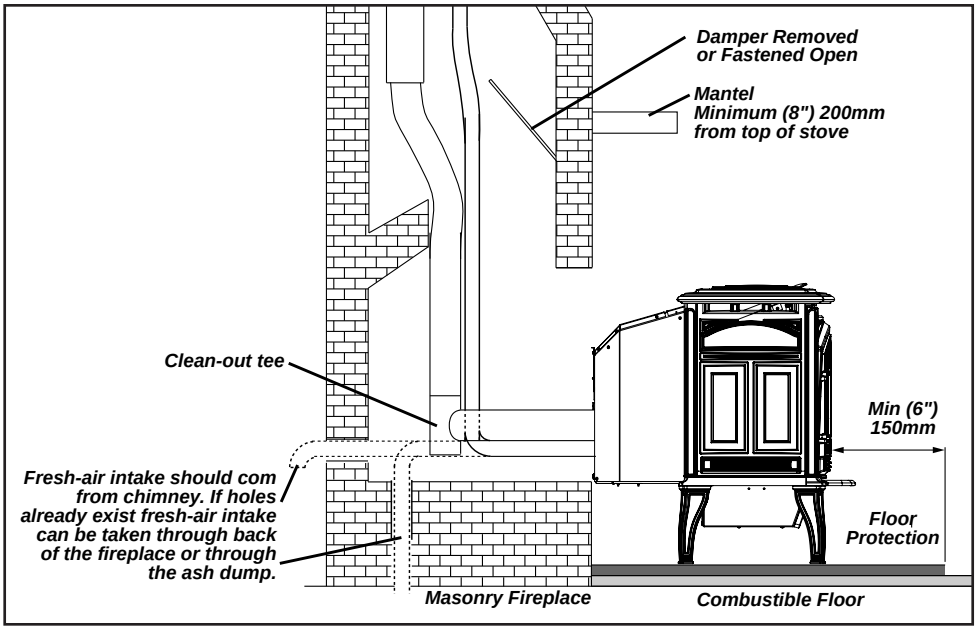

Figure 17: Hearth Mount - Side View.

1. Lock fireplace damper in the open position.
2. Install flexible stainless steel liner or listed pellet vent to the top of the chimney. All joints in the exhaust venting system must be fastened with at least three (3) screws.
3. Install a sealing plate at the top of the chimney.
4. Connect a rain cap and flex adapter to the chimney liner/pipe.
5. Connect a clean-out tee or a 90° elbow to the liner/pipe.
6. Install tee onto stove.

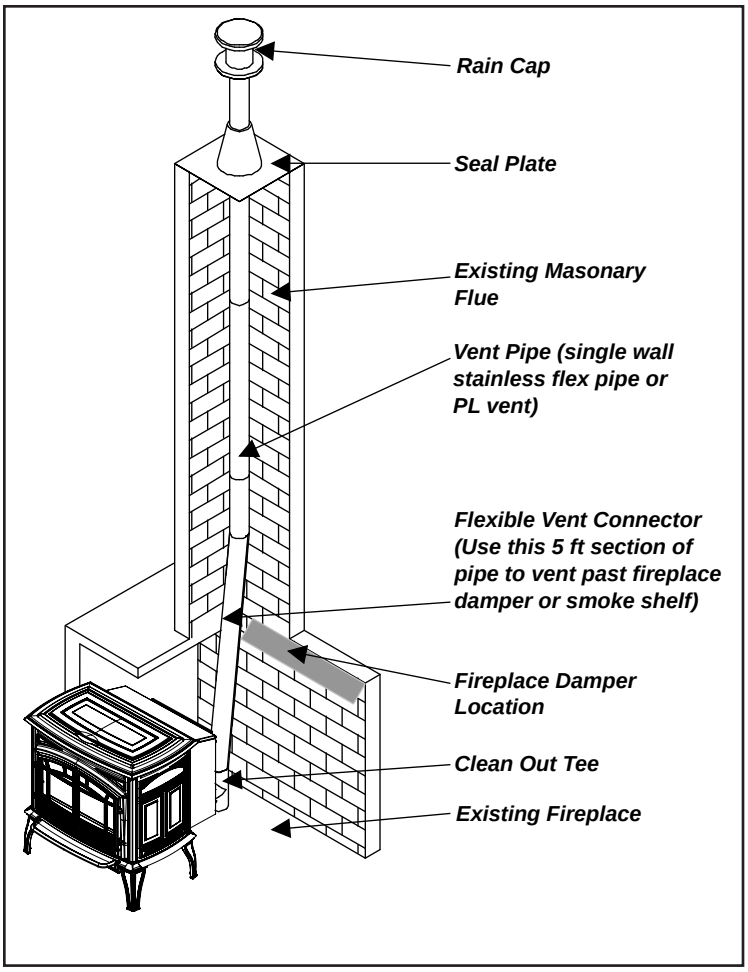

Figure 18: Hearth Mount - Over View.

TOP VENT ADAPTOR KIT & 4" (102 MM) TO 6" (152 MM) FLUE ADAPTOR (VERTICAL INSTALLATIONS ONLY)

*In order to achieve the maximum rated efficiency of 78.2% HHV purchase of a top vent adapter (50-4160) is required.

Use the sheet metal screws provided to attach the kit to the rear of the unit as shown. Please see kit instruction manual for more detailed installation instructions.

The stove must also be connected to a 6" (152 mm) Class A flue (where permitted) using the 4" (102 mm) to 6" (152 mm) Flue Adaptor (4PVP-X6). Refer to 50-4160 installation manual for more details.

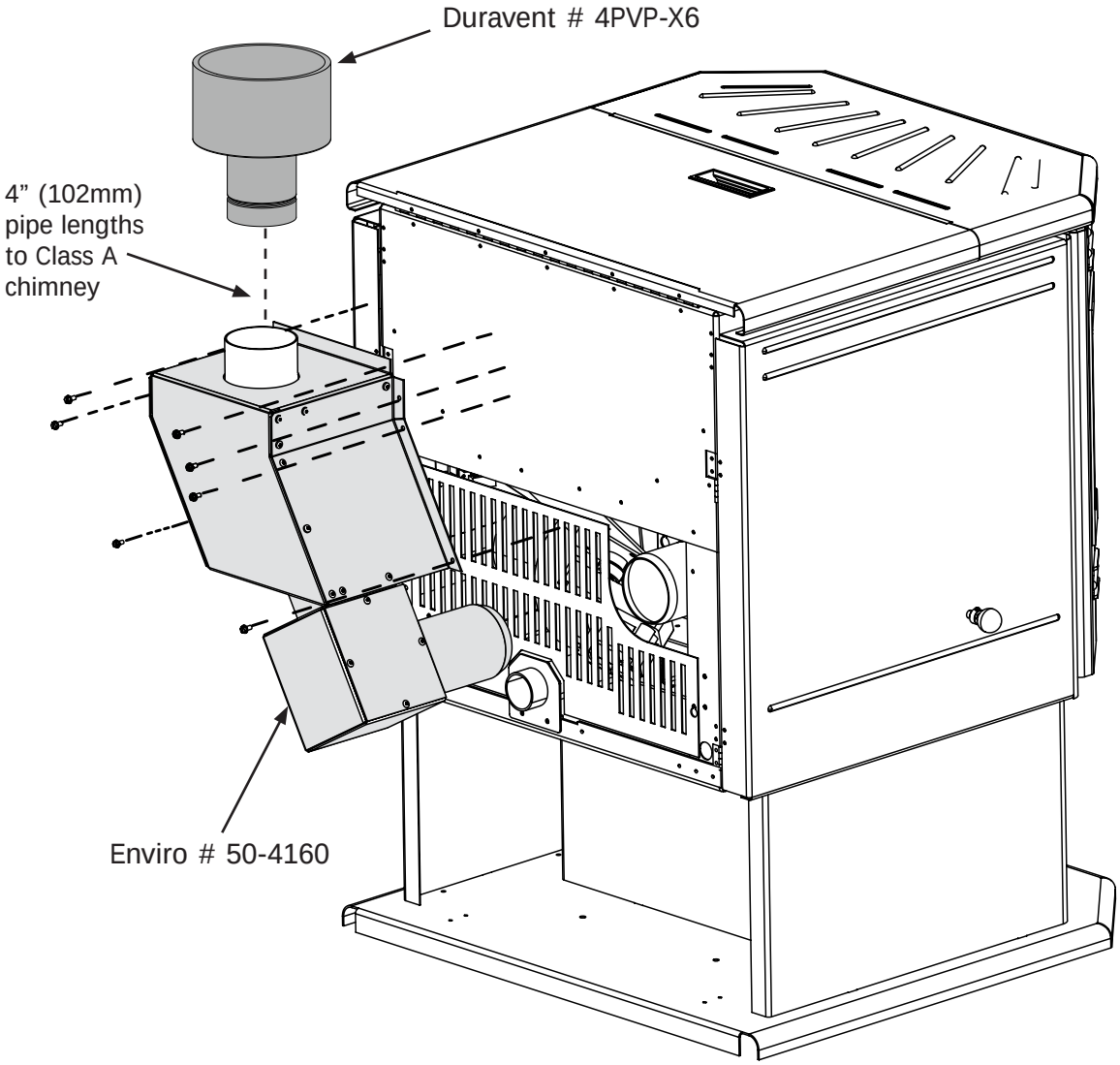

Note: Part # 6DVL-ADT Simpson Duravent DVL adaptor would also be required to connect the 4" (102 mm) - 6" (152 mm) increaser to class A chimney when going through the wall or ceiling when using Simpson Duravent Duraplus/Duratech chimney systems.

Troubleshooting

DO NOT:

- Service the stove with wet hands. The stove is an electrical appliance, which may pose a shock hazard if handled improperly. Only qualified technicians should deal with possible internal electrical failures.
- Do not remove from the firebox any screws without penetrating oil lubrication.

WHAT TO DO IF:

1. The stove will not start.
2. The stove will not operate when hot.
3. The exhaust blower will not function normally.
4. Light # 3 on Heat output bar flashing.
5. Auger light flashes but auger motor does not turn at all.
6. The 200 °F (93 °C) high limit temperature sensor has tripped.
7. The convection blower will not function normally.
8. Ignitor- the Fuel will not light.
9. Control settings (Heat Level) has no effect on the fire.
10. The stove keeps going out.
11 The agitator does not turn.

*NOTE: All troubleshooting procedures should be carried out by qualified technicians or installers.

1. The stove will not start.

- Check the line fuse to see if it has blown.
- Make sure the stove is plugged in and the wall outlet is supplying power.
- If the Control Board has been placed in the ON /OFF thermostat mode, then turn the thermostat up to call for heat.
- Ensure the burn pot liner is correctly placed in the burn pot
- Check the Heat Level Indicator. - If the # 3 light is flashing (unit may be out of fuel)
- Check the Door and Ash Pan door - THEY MUST BE CLOSED TIGHT.
- See section 8 “The Fuel will not light”.
- Check the fuse on the circuit board.
- If the unit still does not start, contact your local service dealer for service.

2. The stove will not operate when hot.

- Check the Heat Level Indicator if a fire is not detected or if the fire has gone out the #3 light will flash because the Exhaust Temperature Sensor’s contacts have opened.
- Check the hopper for fuel.
- Incorrect air damper/combustion air trim setting.
  Excessive air may consume the fire too quickly before the next drop of fuel, leaving completely unburned fuel in the burn pot liner.
  Insufficient air may cause the vacuum switch to open or will cause build up, further restricting the air flow through the Burn Pot Liner. This in turn will cause the fuel to burn cold and very slowly. Fuel may build up and smother the fire. In this case clean the burn pot.
  NOTE: The unit may require a change to the vent system or installation of fresh air to correct Air to Fuel ratio problems if unable to achieve proper damper setting.
- Combustion Blower failure. - The Combustion Blower is not turning fast enough to generate the proper vacuum in the fire box. Visual Check – is the blower motor turning. See section *#3 - The Exhaust Blower will not function normally*.
- Poor Quality Fuel – Insufficient energy in the fuel to produce enough heat to keep the stove burning

- Exhaust Temperature Sensor failure. Bypass sensor located on Exhaust Blower, if stove now operates properly, the unit may require cleaning or a new sensor. Contact your local dealer for service.
- Check the agitator to make sure it is turning properly

3. The exhaust motor will not function normally.
- Check the line fuse to see if it has blown.
- Open the access panels; check all connections against the wiring diagram.
- Check the Exhaust Blower voltage across the blower motor wires (>=115V on #5 setting and >= 75V on #1 setting). – Replace the Circuit Board if the Voltage reading is less than 75 V. with a line voltage of >115 V AC.
- Clean all exhaust passages and venting.
- Check and, if necessary, replace capacitor.

4. Light # 3 on Heat output bar flashing (The Exhaust Temp. Switch contacts have opened.)
- Stove ran out of fuel - check fuel level in the hopper.
- See sections *#2 - Stove will not operate when hot, #3 - The Exhaust motor will not function normally,* and *#5 - Unit is on but auger does not turn at all for more suggestions.*
- Severe negative pressure in area where unit is installed - Check the operation by opening a window, does this solve the problem? If it does, install fresh air intake to unit or room. Venting system may require vertical section to move termination into a low pressure zone.
- To reset Circuit Board after a trouble code - push the ON/OFF button.

5. Unit is on but auger motor does not turn at all.
- Check the line fuse to see if it has blown.
- Check the Door and Ash Pan door - THEY MUST BE CLOSED TIGHT.
- If the Auger gear box does not turn but the motor's armature does try to spin, then the auger is jammed. Try to break apart jam by poking at the jam through the drop tube. If this fails then empty the hopper and remove the Auger Cover **Remember to re-seal the cover after installation**
- Auger stopped running. Pinch, break or blockage in Vacuum Hose - Check hose for pinch points or damage, replace or re-route as required. Blow out Vacuum Hose and intake pipe.
- Damage to wires between Circuit Board and Vacuum Switch and Auger Motor - Inspect wires and connectors.
- Vacuum Switch failure - Bypass the vacuum switch, if this corrects the problem check for above problems before replacing the Vacuum Switch.
- Blocked exhaust / venting system - Have stove and venting cleaned and inspected.
- Check Vacuum levels at the Vacuum Switch, with a Magnahelic Gauge (readings must be above .07" W.C. on low fire).

6. Light # 4 on Heat output bar flashing The 200 °F (93 °C) high limit temperature sensor has tripped.
- Reset sensor and determine cause. Was it Convection Blower failure or Circuit board control problems?
- Hopper lid has been left open for longer than two minutes.

7. The convection blower will not function normally.

- Check the line fuse to see if it has blown.
- Clean all grill openings at the back and below unit .
- Check the Voltage across the blower wires, It should adjust with the heat output settings. If not contact your local dealer for service.

8. Ignitor - the pellets will not light.

- Check the line fuse to see if it has blown.

NOTE: The ignitor should be bright orange in color.

- Everything else in the stove operates but the ignitor will not light the pellets.
- Make sure the burn pot liner is up tight and square to the ignitor
- Check to see if the exhaust blower is operating. If not, contact your local dealer for service.

9. Control settings (Heat Level) has no effect on the fire.

- Check position of the Thermostat slide switch on the Circuit Board.
- If there is no control of the Heat Level button, make sure the thermostat is calling for heat.
- Call your local dealer for service.

10. The stove keeps going out.

If the stove goes out and leaves fresh unburned fuel in the burn pot liner, the fire is going out before the stove shuts off.

- Trim the combustion air down to decrease the magnahelic pressure.
- Turn the Heat Level up slightly (poor quality fuels will require slightly higher settings).
- Set the auger trim up one setting

If the stove goes out and there are partially burned pellets left in the burn pot liner, the stove has shut down due to a lack of air, exhaust temperature, or power failure.

- Trim the combustion air to a higher setting to increase the magnahelic pressure inside the stove.
- Check to see if the stove needs a more complete cleaning.
- Turn the Heat Level up slightly (poor quality fuel will require slightly higher settings).
- Jump the exhaust temperature sensor, if this fixes the problem then replace the white 120 °F (49 °C) sensor
- Did the power go out?
- Contact your local Dealer for service.

11. The agitator does not turn.

- Ensure unit has finished start-up.
- Ensure agitator is locked into the drive shaft properly and is not jammed.
- Check drive chain assembly and gear motor for damage.
- Check the agitator motor is functioning properly.

Wiring Diagram

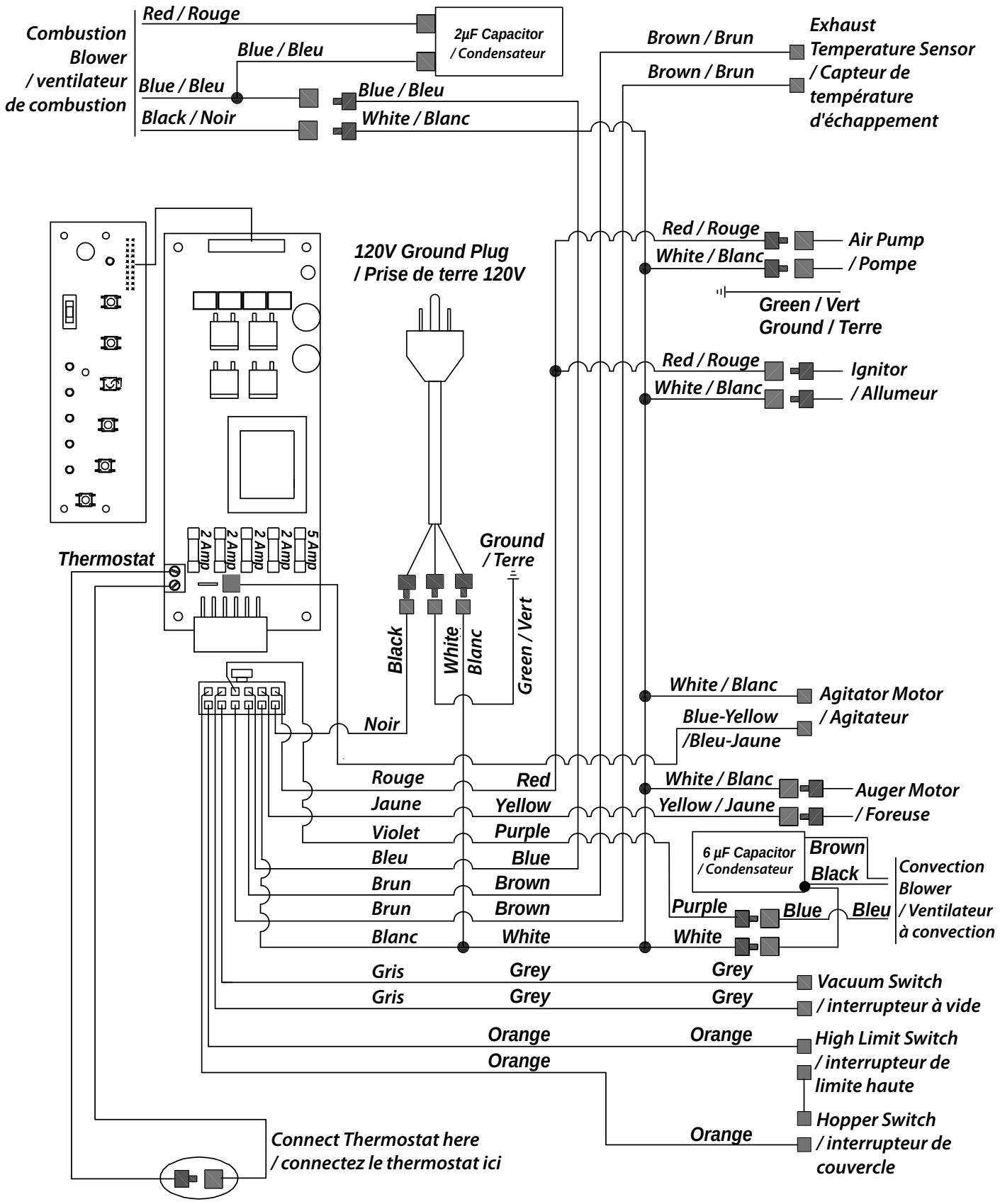

Parts List

ITEM #	DESCRIPTION	PART #
1	AUGER WITH PADDLES	50-1161
2	VACUUM SWITCH LOW PRESSURE	50-1390
3	AUGER STOPS (CLEAR RUBBER)	50-1559
4	AUGER PLATE AND BUSHING (ASSEMBLY)	50-1658
5	BURN POT	50-1692
6	STAINLESS STEEL CAST AGITATOR W COUPLER	50-1697
7	AGITATOR DRIVE SHAFT W/ SPROCKET	50-1698
8	MOTOR DRIVE SPROCKET	50-1700
9	.250 SPRING PIN	50-1701
10	AIR PUMP	50-1702
11	AGITATOR BUSHING LEFT SIDE	50-1703
12	5/8” ID AUGER BRASS BUSHINGS (SET OF 2)	50-1806
13	N/A	-
14	FIRE GRATE	50-2036
15	AGITATOR DRIVE BRACKET	50-2038
16	SS BURN POT LINER	50-4268
17	EXHAUST STARTER TUBE CW GASKET	50-2043
18	CAST FLUTED FIREBOX LINER	50-2048
19	HOPPER SWITCH	50-2052
20	EXHAUST MOTOR CAPACITOR C/W STRAP	50-2053
21	AUGER MOTOR 2 RPM	50-2054
22	EXHAUST STARTER TUBE GASKET ONLY	50-2055
23	DRIVE CHAIN	50-2059
24	CONVECTION BLOWER 80 MM	50-2064
25	SILICONE HOSE (BLACK)	50-2067
26	COMBUSTION BLOWER INCLUDING HOUSING & GASKET	50-2068
27	FIREBOX LOWER	50-2072
	M55C-FS OWNER’S MANUAL	50-2100
28	M55C-FS CAST TOP WITH HOPPER LID	50-2105
29	M55C-FS CAST LEG	50-2106
30	M55C-FS CAST FRONT WITH DOORS	50-2107

Parts List

ITEM #	DESCRIPTION	PART #
31	CONTROL PANEL WITH DECAL	50-2108
32	M55C-FS DAUGHTER BOARD	50-2109
33	M55C-FS MOTHER BOARD	50-2110
34	M55C-FS CAST SIDE LEFT	50-2111
35	M55C-FS CAST SIDE RIGHT	50-2112
36	M55C-FS CAST LEG LIP LEFT	50-2113
37	M55C-FS CAST LEG LIP RIGHT	50-2114
40	M55C-FS CAST ASH DOOR	50-2115
39	ASH PAN	50-2116
40	M55C-FS GLASS ONLY	50-2119
41	GLASS RETAINER	50-2122
42	DOOR COMPLETE	50-2137
43	AUGER TUBE COVER	50-2141
44	M55 IGNITOR ASSEMBLY	50-2142
45	HINGE BRACKET (INNER)	50-2144
46	M55 EXHAUST CHANNEL CW SENSOR	50-2145
47	M55C BAFFLE	50-2148
48	WIRING HARNESS	50-2149
49	M55C-FS MOTHERBOARD MOUNTING BRACKET	50-2150
50	M55C-FS CAST FRONT MOUNTING BRACKETS (SET OF 2)	50-2151
51	M55C-FS MAGNET LATCH (SET OF 2)	50-2152
52	.625 ID AUGER COLLAR WITH SCREW	50-968
53	AUGER MOTOR 1 RPM	EF-001
54	HIGH LIMIT TEMP SENSOR 200F MANUAL RESET	EF-016
55	SILICONE HOSE (RED)	EF-018
56	FIREBOX CLEANING PORT COVERS	EF-194A

Parts Diagram - Components

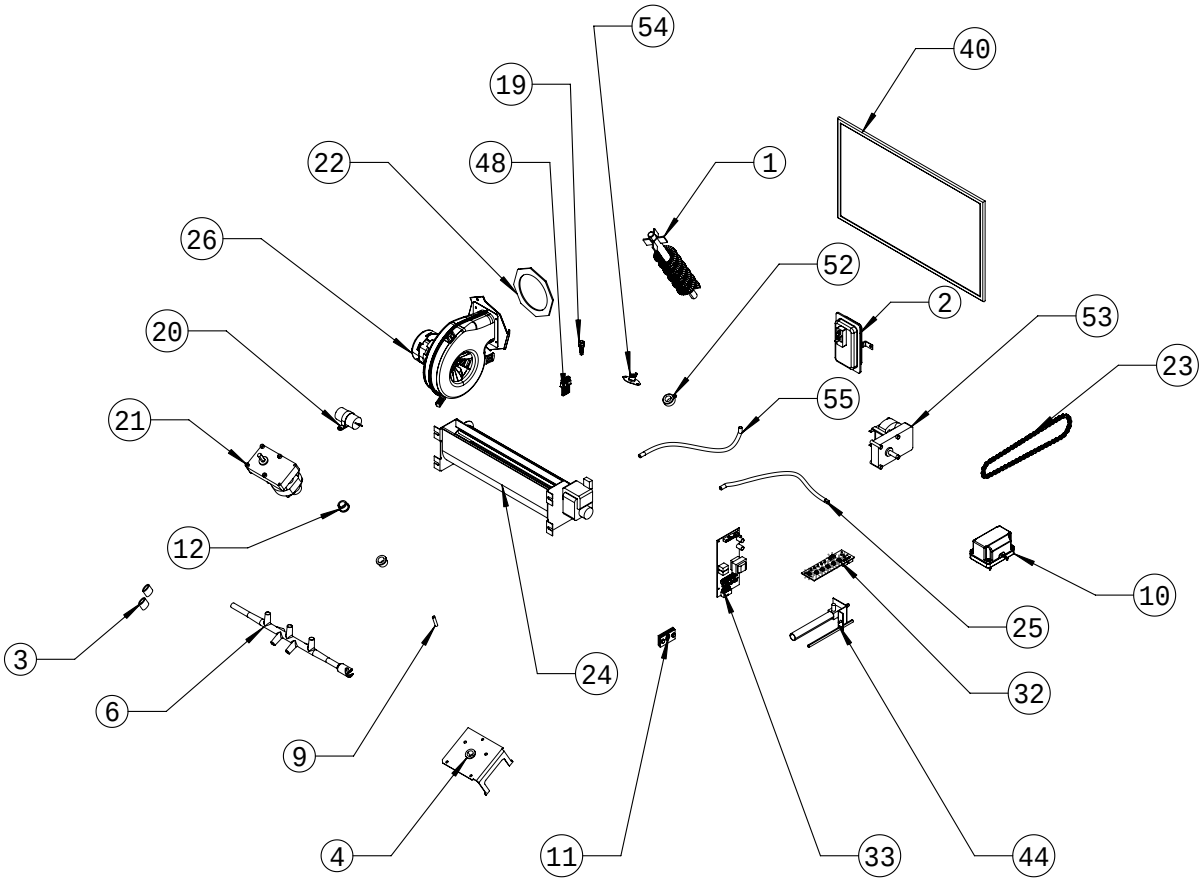

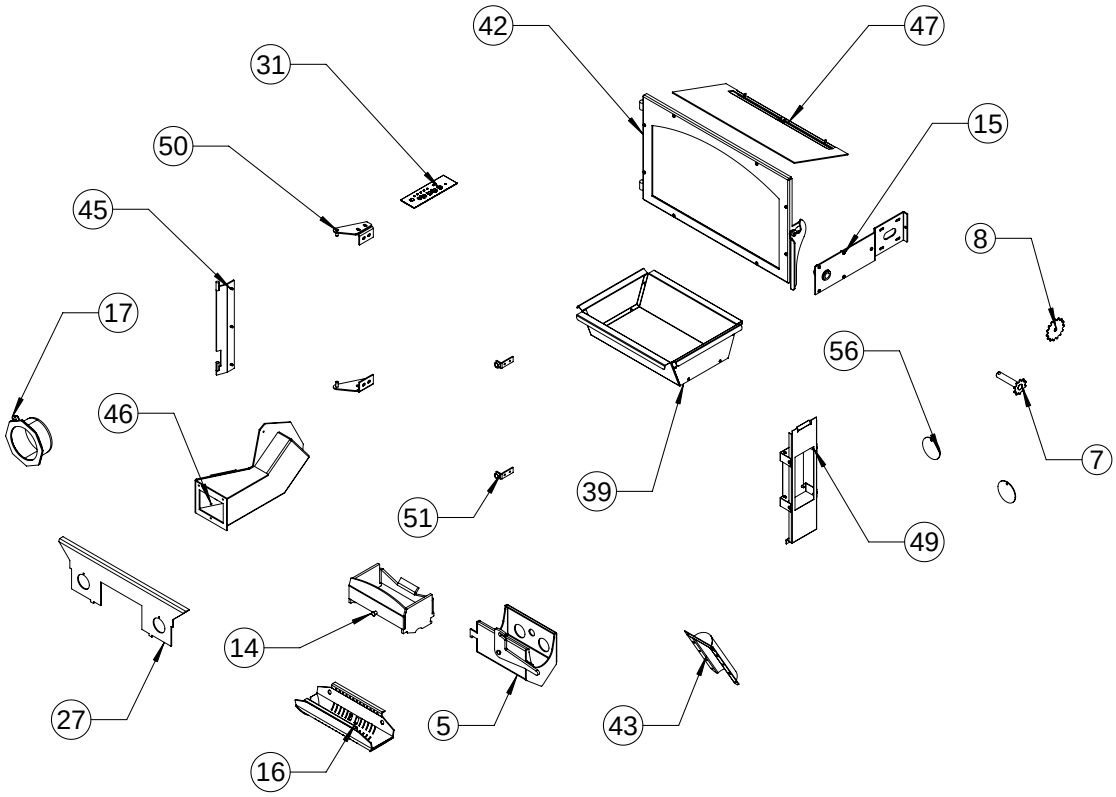

Parts Diagram - CAST

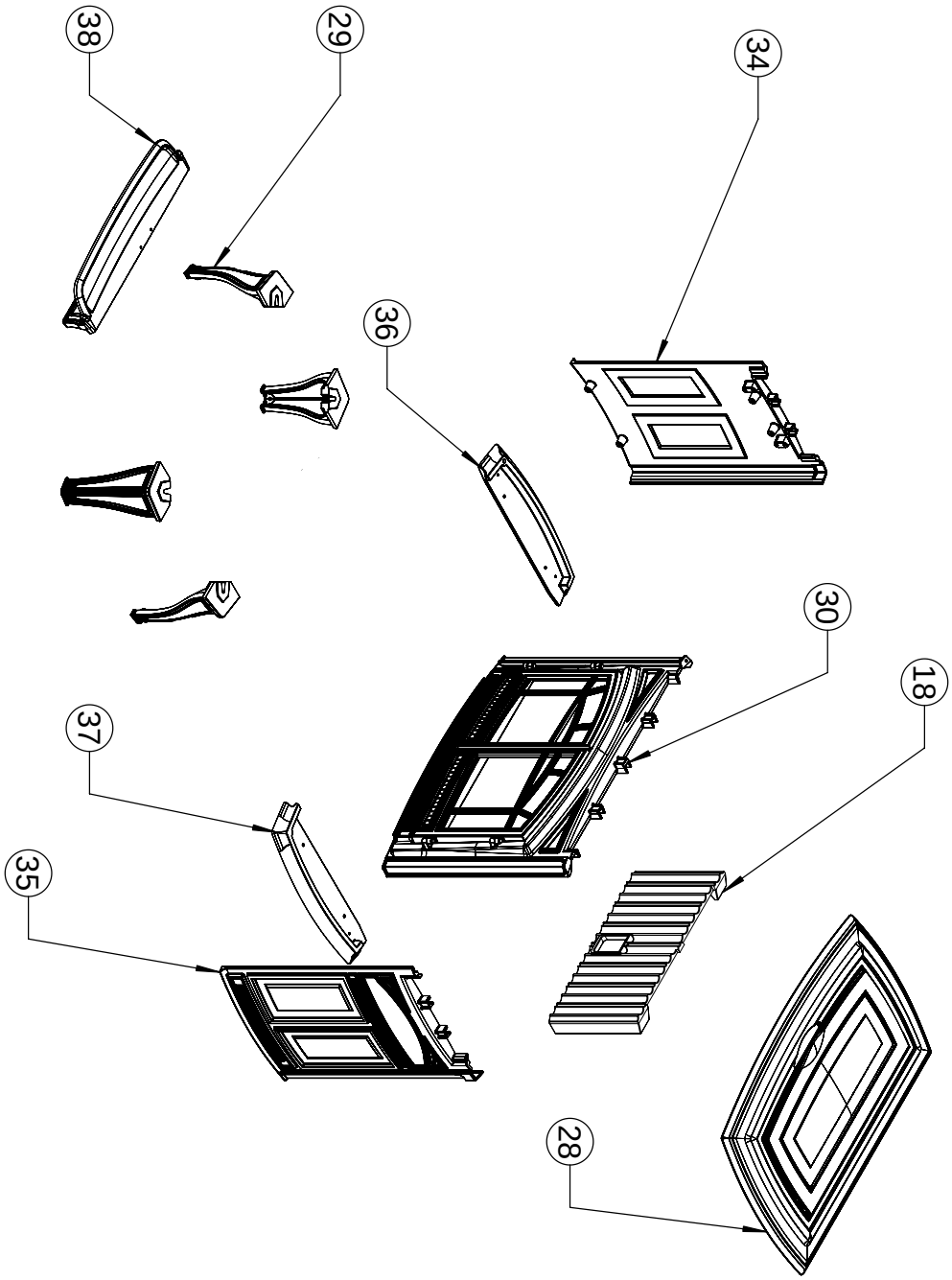

Notes

Warranty for Enviro **Pellet** Products

Sherwood Industries Ltd. ("Sherwood") hereby warrants, subject to the terms and conditions herein set forth, this product against defects in material and workmanship during the specified warranty period starting from the date of original purchase at retail. In the event of a defect of material or workmanship during the specified warranty period, Sherwood reserves the right to make repairs or to assess the replacement of a defective product at Sherwood's factory. The shipping costs are to be paid by the consumer. All warranties by Sherwood are set forth herein and no claim shall be made against Sherwood on any oral warranty or representation.

Conditions

- A completed warranty registration must be submitted to Sherwood within 90 days of original purchase via the online warranty registration page or via the mail-in warranty registration card provided. Have the installer fill in the installation data sheet in the back of the manual for warranty and future reference.
- This warranty applies only to the original owner in the original location from date of install.
- The unit must have been properly installed by a qualified technician or installer, and must meet all local and national building code requirements.
- The warranty does not cover removal and re-installation costs.
- Sherwood Industries Ltd. reserves the right to make changes without notice.
- Sherwood Industries Ltd. and its employees or representatives will not assume any damages, either directly or indirectly caused by improper usage, operation, installation, servicing or maintenance of this appliance.
- A proof of original purchase must be provided by you or the dealer including serial number.
- This warranty is void if the unit is used to burn materials for which the unit is not certified by the EPA and void if not operated according to the Owner's Manual.

Exclusions

An expanded list of exclusions is available at www.enviro.com/help/warranty.html

This warranty does not cover:

- Damage as a result of improper usage or abuse.
- Damage caused from over-firing due to incorrect setup or tampering.
- Damage caused by incorrect installation.

To the Dealer

- Provide name, address and telephone number of purchaser and date of purchase.
- Provide date of purchase. Name of installer and dealer. Serial number of the appliance. Nature of complaint, defects or malfunction, description and part # of any parts replaced.
- Pictures or return of damaged or defective product may be required.

To the Distributor

- Sign and verify that work and information are correct.

Sherwood Industries Ltd.
6782 Oldfield Road, Victoria, BC . Canada V8M 2A3
Online warranty registration: www.enviro.com/warranty/

Category	One Year	Two Year	Limited Lifetime (7yr)
Parts [1] (unit serial number required)		✔	
Firebox Brick Panels (Cast)		✔	
Firebox			✔
Heat Exchanger			✔
Burn Pot			✔
Burn Pot Liner		✔	
Firebox Liner Panels w/Insulation			✔
Ceramic Glass [2]	✔		
Pedestal / Legs (excluding finish)			✔
Surround Panels (excluding finish)			✔
Exterior Panels (excluding finish)			Up to 5 years
Electrical Components		✔	
Steel Brick Liner (Metal)	✔		
Exterior Surface Finishing [3]	✔		
Labour	✔		

[1] Whereas warranty has expired, replacement parts will be warrantied for 90 days from part purchase date. Labour not included. Unit serial number required.

[2] Glass is covered for thermal breakage. Photos of box, inside of door, and unit serial # must be supplied for breakage due to shipping.

[3] Exterior Surface finishing covers Plating, Enamel or Paint and excludes colour changes, chipping, and fingerprints.

Gaskets not covered by Warranty.

Travel costs not included.

Cast Agitator: 1 year for pellet. Not covered when burning alternative fuels. (Cast agitators are a consumable item)

Installation Data Sheet

The following information must be recorded by the installer for warranty purposes and future reference.

NAME OF OWNER:

_____

ADDRESS:

_____

_____

_____

PHONE:_____

NAME OF DEALER:

_____

ADDRESS:

_____

_____

_____

PHONE:_____

MODEL:_____

SERIAL NUMBER:_____

DATE OF PURCHASE: _____ (dd/mm/yyyy)

DATE OF INSTALLATION:_____(dd/mm/yyyy)

MAGNEHELIC AT INSTALL:_____

INSTALLER'S SIGNATURE:

_____

NAME OF INSTALLER:

_____

ADDRESS:

_____

_____

_____

PHONE:_____

MANUFACTURED BY:
SHERWOOD INDUSTRIES LTD.
6782 OLDFIELD RD. SAANICHTON, BC, CANADA V8M 2A3
www.enviro.com
January 2025
C-16305